Docket No. CP80-

(DESIGN MANUAL)

Exhibit Z-9.0
Design Summary

Volume VI

Errata No. 1

ALASKA SEGMENT

ALASKA NATURAL GAS TRANSPORTATION SYSTEM

ENT G
t-of-Way lease appli-
ubmitted to the State
ka

April 1981

Alaskan Northwest Natural Gas
Transportation Company

United States of America
Before the
Federal Energy Regulatory Commission

Docket No. CP80-

(DESIGN MANUAL)

Exhibit Z-9.0
Design Summary

Volume VI

Errata No. 1

Application of
ALASKAN NORTHWEST NATURAL GAS TRANSPORTATION COMPANY

For a Final Certificate of Public Convenience and Necessity Pursuant to Section 7 (C) of the Natural Gas Act, as amended, and Section 9 of the Alaska Natural Gas Transportation Act of 1976 to construct and operate the Alaska Segment of the Alaska Natural Gas Transportation System.

October 22, 1980

REF
ALASKA
TN
880.5
.A42
vol. 6
Errata.1

CONSORTIUM LIBRARY, ANCHORAGE, AK

Docket No. CP80-
Exhibit Z-9.0
Hearing Exhibit No.

APPENDIX E

Typical Drawings, Locations of

Mainline Valves, River and Road

Crossings and Other Pipeline

Crossings

DRAWINGS — PAGE

Ditch Configuration, Type I, Conventional . E-5

Ditch Configuration, Type II, Permafrost. . E-6

Ditch Configuration, Type III, Rock Ditch . E-7

Ditch Configuration, Type IV, Deep Burial . E-8

Ditch Configuration, Type V, Mitigative, Insulated Pipe/Overexcavation E-9

Typical Uncased Road Crossing E-10

Typical Cased Road Crossing E-11

Typical River Crossing Set On Weights . . . E-12

Typical River Crossing Concrete Coated. . . E-13

Typical Unweighted Stream Crossing. E-14

Cable Suspension Bridge Details, Lower Tanana River Crossing E-15

Cable Suspension Bridge Details, Upper Tanana River Crossing E-16

Cable Suspension Bridge, Typical Cross Section at Midspan. E-17

Yukon Bridge Plan and Profile E-18

Pipeline Support Spacing on Yukon Bridge. . E-19

Typical Pipeline Support Details, Yukon River Bridge. E-20

Middle Fork Koyukuk/Hammond Plan and Profile E-20A

Middle Fork Koyukuk/Hammond Typical Overhead Support Member E-20B

Cable Suspension Bridge Details Middle Fork Koyukuk River Crossing E-20C

Steel Arch Bridge Details Hammond River Crossing. E-20D

DRAWINGS PAGE

Steel Arch Bridge Cross Section Hammond River Crossing. E-20E

Typical Alyeska Pipeline Crossing Aboveground with Adjacent Fuel Gas Line. . . . E-21

Typical Alyeska Pipeline Crossing Belowground. E-22

Typical Utility Corridor Crossing E-23

Typical Fuel Gas Line Crossing. E-24

Aboveground Gathering Line Crossing E-25

Chena River Flood Plain Project, Moose Creek Dam Crossing. E-26

Typical Alyeska Crossing Aboveground. . . . E-27

Typical Prudhoe Bay Road and Alyeska Below Ground Crossing E-27A

Typical Alyeska and Fuel Gas Pipeline Crossing Below Ground E-27B

Typical Mainline Valve Station. E-28

Typical Valve Station at Future Compressor Stations. E-29

Typical Gas Take-Off Assembly E-30

Typical Insulated Pipe with Reinforced Concrete Coating. E-31

Typical Weld Bevels E-32

Typical Marker Signs. E-33

Typical Ditch Breaker E-34

Concrete Set-On Weight Details. E-35

Typical Wetland Crossing. E-36

Typical Test Point Installation E-37

DRAWINGS — PAGE

Typical Insulating Fitting for Electrically Isolating Pipeline. E-38

Galvanic Anode Installations at Nonfrozen Inclusions Along Pipeline in Permafrost . E-39

Typical Deep Anode Groundbed Unheated - For Use in Permafrost E-40

Typical Deep Anode Groundbed with Internal Heat for Use in Permafrost. E-41

Standard Test Stations. E-42

TABLES — PAGE

Mainline Valve Locations. E-43

Major Stream Crossings Requiring Special Construction Considerations E-46

Road Crossings. E-47

Location of Other Pipeline Crossings. . . . E-51

DOCKET NO CP80
EXHIBIT Z-9.0
HEARING EXHIBIT NO

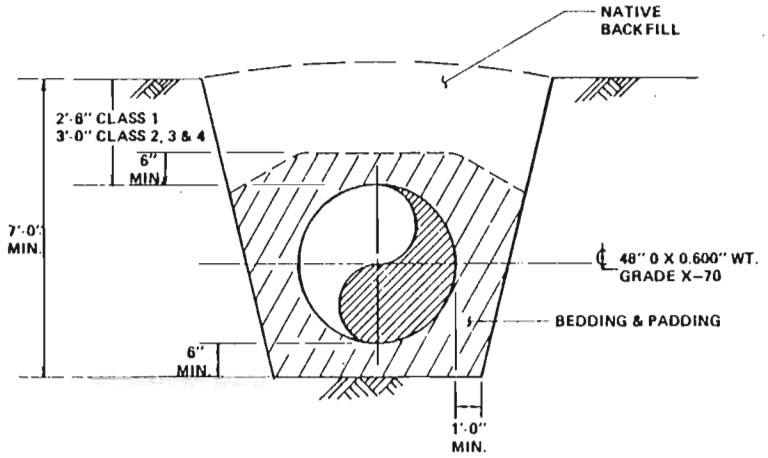

GENERAL NOTES

1. 25% OF THIS DITCH TYPE WILL REQUIRE BEDDING AND PADDING FOR ESTIMATING PURPOSES.
2. FOR ESTIMATING PURPOSES DITCH SIDEWALL SLOPE ASSUMED TO BE 1:4.
3. COMMON BACKFILL TO BE USED ONLY AT SITE SPECIFIC LOCATIONS WHERE NATIVE BACKFILL IS UNSUITABLE.
4. PIPE WALL THICKNESS IN CLASS 2 AREAS TO BE 0.720".

DWG. NO. 4680-10-00-9-P-101

ALASKAN NORTHWEST NATURAL GAS TRANSPORTATION COMPANY

DITCH CONFIGURATION
TYPE I
CONVENTIONAL

ALASKA SEGMENT OF THE ALASKAN NATURAL GAS TRANSPORTATION SYSTEM

FLUOR J.R. Brandt	DATE 4/30/80	
CHECK [illegible] 4/30/80	FIGURE	

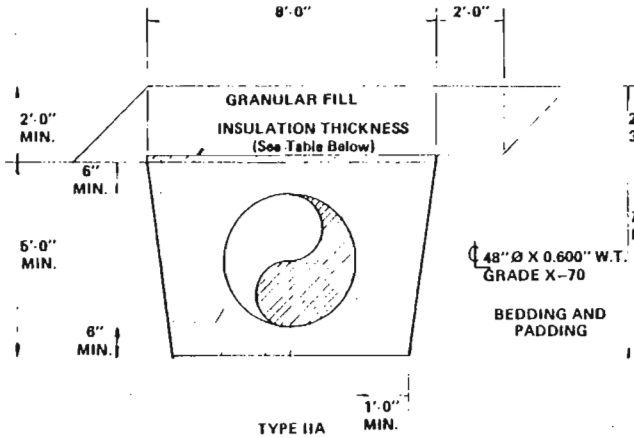

TYPE IIA
PERMAFROST AREAS
(North of Brooks Range)

TYPE IID
PERMAFROST AREAS
(North of Brooks Range)

Identical to Type IIA except no insulation installed over ditch. Use from MP 38.7 to MP 63.9.

INSULATION THICKNESS	FROM MP	TO MP
1½"	0	24.2
2"	24.2	38.7
3"	63.9	114.4
3½"	114.4	162.8

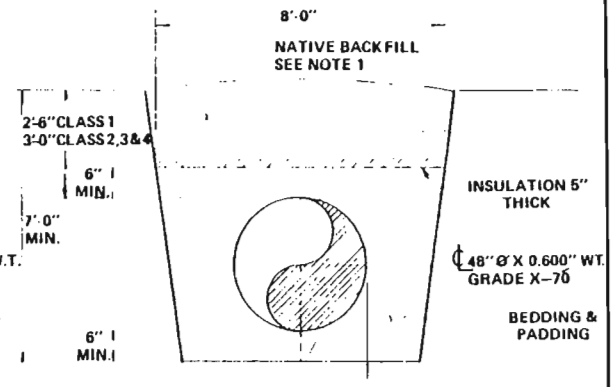

TYPE IIB
PERMAFROST
(Thaw Unstable)

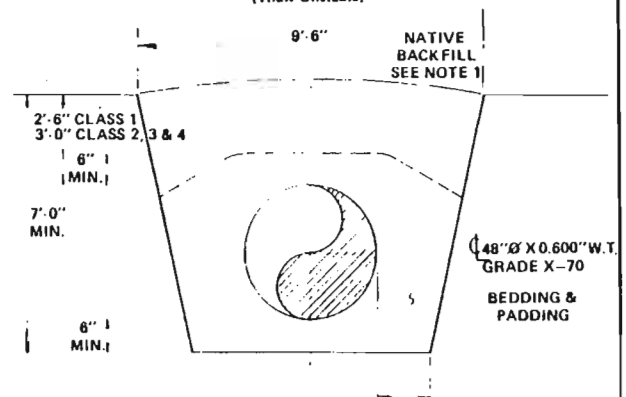

TYPE IIC
PERMAFROST
(Thaw Stable)

DOCKET NO CP80
EXHIBIT Z-9.0
HEARING EXHIBIT NO

GENERAL NOTES

1. COMMON BACKFILL TO BE USED ONLY AT SITE SPECIFIC LOCATIONS WHERE NATIVE BACKFILL IS UNSUITABLE.
2. PIPE WALL THICKNESS IN CLASS 2 AREAS TO BE 0.720".

DWG. NO 4680-10-00-9-P-102

ALASKAN NORTHWEST NATURAL GAS TRANSPORTATION COMPANY

DITCH CONFIGURATION
TYPE II
PERMAFROST

ALASKA SEGMENT OF THE ALASKAN NATURAL GAS TRANSPORTATION SYSTEM

FLOOR JRB	DATE 4/30/80	
CHECK	FIGURE	5/11

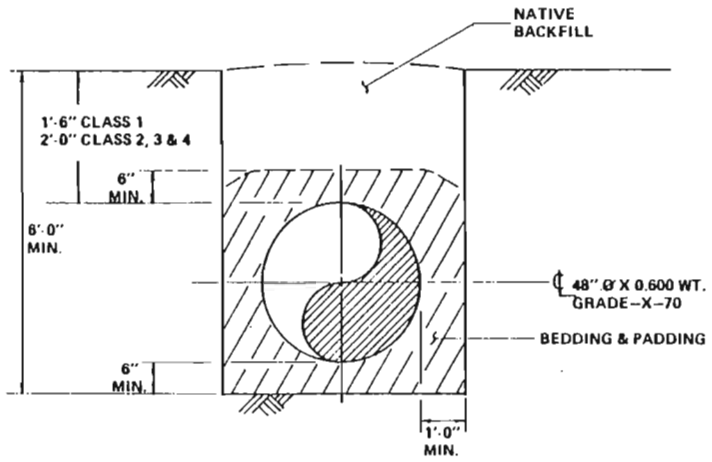

DOCKET NO CP80
EXHIBIT .. Z-9.0
HEARING EXHIBIT NO

GENERAL NOTES

1. SINCE THE DITCH THROUGH ROCK AREAS WILL BE BLASTED, SKETCH INDICATES THEORETICAL OR "NEAT" DITCH LINE.

2. PIPE WALL THICKNESS IN CLASS 2 AREAS TO BE 0.720".

DWG. NO. 4680-10-00-8-P-103

ALASKAN NORTHWEST NATURAL GAS TRANSPORTATION COMPANY

DITCH CONFIGURATION
TYPE III
ROCK DITCH
ALASKA SEGMENT OF THE ALASKAN NATURAL GAS TRANSPORTATION SYSTEM

DRAWN J.R.Brandt	DATE 1/30/80	
CHECK 9/22/80	FIGURE	5.1.4

DOCKET NO CP80
EXHIBIT Z-9.0
HEARING EXHIBIT NO

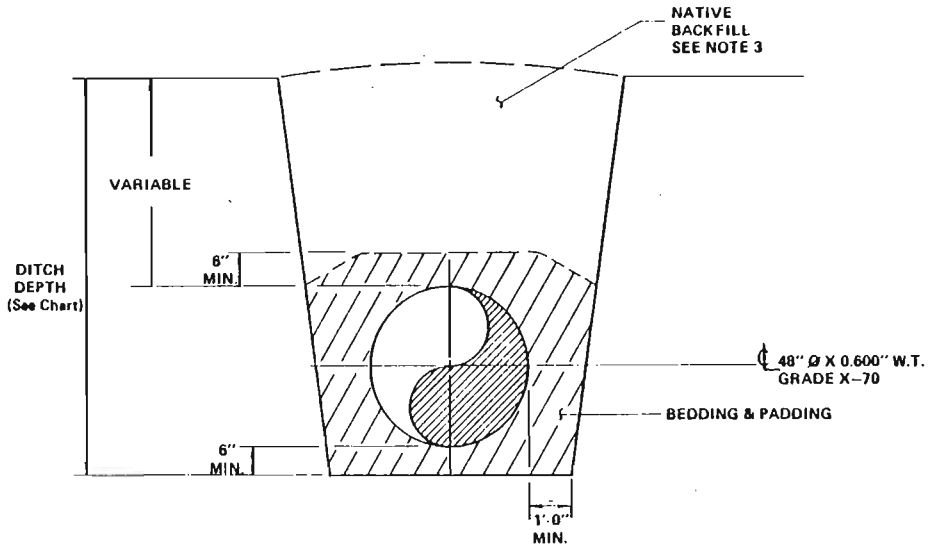

SUB TYPE	DEPTH
A	8'
B	9'
C	10'
D	11'
E	12'

GENERAL NOTES

1. 25% OF THIS DITCH TYPE WILL REQUIRE BEDDING AND PADDING FOR ESTIMATING PURPOSES.
2. FOR ESTIMATING PURPOSES DITCH SIDE-WALL SLOPE ASSUMED TO BE 1:4.
3. COMMON BACKFILL TO BE USED ONLY AT SITE SPECIFIC LOCATIONS WHERE NATIVE BACKFILL IS UNSUITABLE.
4. PIPE WALL THICKNESS IN CLASS 2 AREAS TO BE 0.720".

DWG. NO. 4680-10-00-9-P-104

ALASKAN NORTHWEST NATURAL GAS TRANSPORTATION COMPANY

DITCH CONFIGURATION
TYPE IV
DEEP BURIAL

ALASKA SEGMENT OF THE ALASKAN NATURAL GAS TRANSPORTATION SYSTEM

FLOOR J R Brandt	DATE 4/30/00	
CHECK [illegible] 4/22/80	FIGURE	2/14

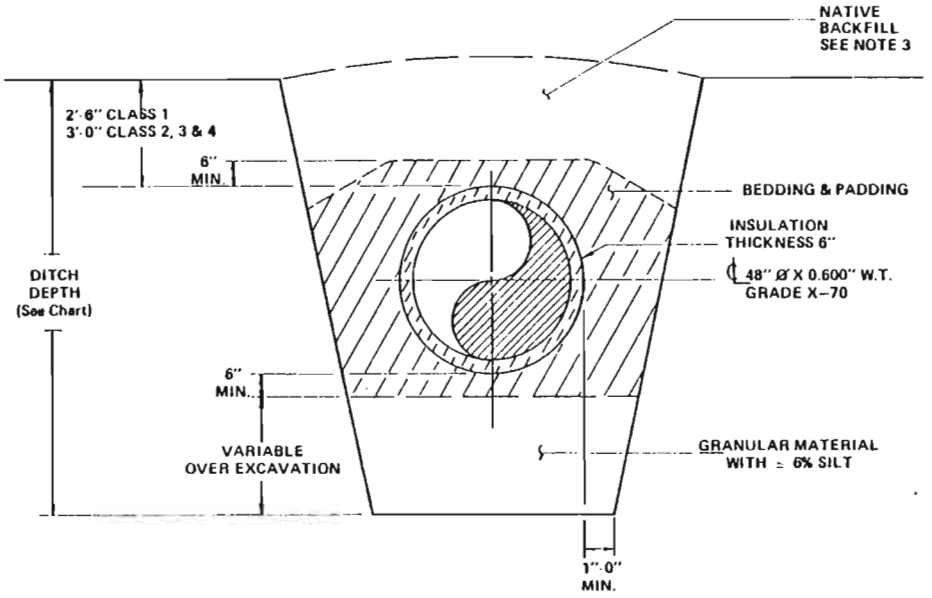

SUB TYPE	DEPTH
A	8'
B	9'
C	10'
D	11'
E	12'

DOCKET NO. CP80
EXHIBIT Z-9.0
HEARING EXHIBIT NO.

GENERAL NOTES

1. 25% OF THIS DITCH TYPE WILL REQUIRE BEDDING AND PADDING.
2. FOR ESTIMATING PURPOSES DITCH SIDE-WALL SLOPE ASSUMED TO BE 1:4.
3. COMMON BACKFILL TO BE USED ONLY AT SITE SPECIFIC LOCATIONS WHERE NATIVE BACKFILL IS UNSUITABLE.
4. PIPE WALL THICKNESS IN CLASS 2 AREAS TO BE 0.720".

DWG. NO. 4680-10-00-9-P-105

ALASKAN NORTHWEST NATURAL GAS TRANSPORTATION COMPANY

DITCH CONFIGURATION
TYPE V, MITIGATIVE
INSULATED PIPE/OVEREXCAVATION

ALASKA SEGMENT OF THE ALASKAN NATURAL GAS TRANSPORTATION SYSTEM

FLOOR J R Brandt	DATE 4/30/80	
GIEC [signature] 4/22/80	FIGURE	

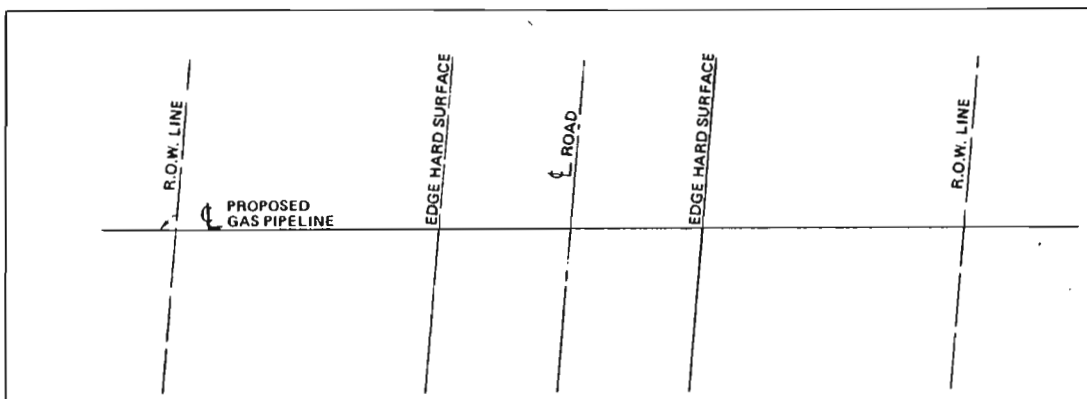

PLAN
N.T.S.

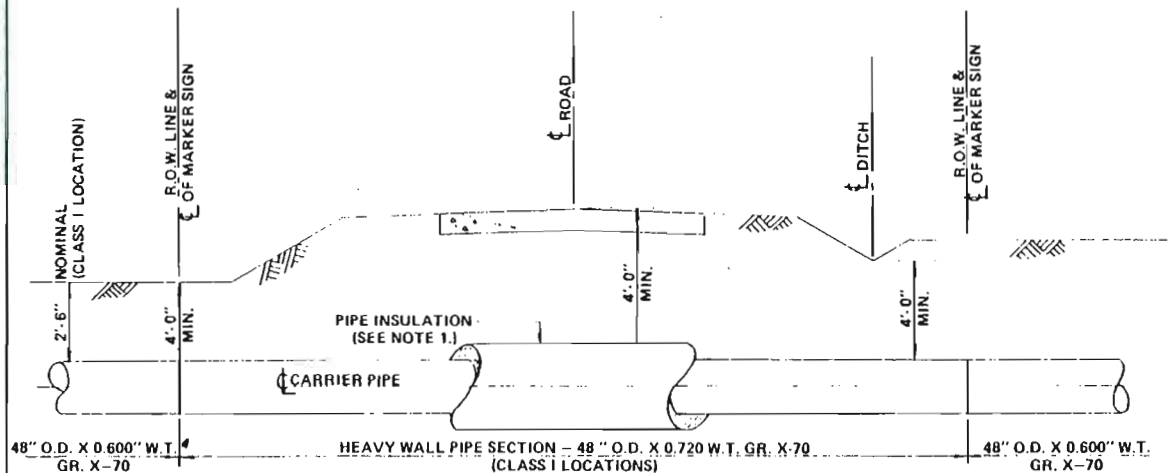

PROFILE
N.T.S.

DOCKET NO CP80
EXHIBIT Z-9.0
HEARING EXHIBIT NO

GENERAL NOTES

1. PIPE INSULATION TO BE USED IN FROST SUSCEPTIBLE SOIL AREAS WHERE TYPE V TRENCH CONFIGURATION IS USED.
2. PIPE WALL THICKNESS IN CLASS 2 LOCATIONS WILL BE 0.864".

DWG. NO. 4680-10-00-9-P-201

ALASKAN NORTHWEST NATURAL GAS TRANSPORTATION COMPANY

TYPICAL UNCASED ROAD CROSSING

ALASKA SEGMENT OF THE ALASKAN NATURAL GAS TRANSPORTATION SYSTEM

FLUOR	DATE 7/30/80	
CHEC	FIGURE	

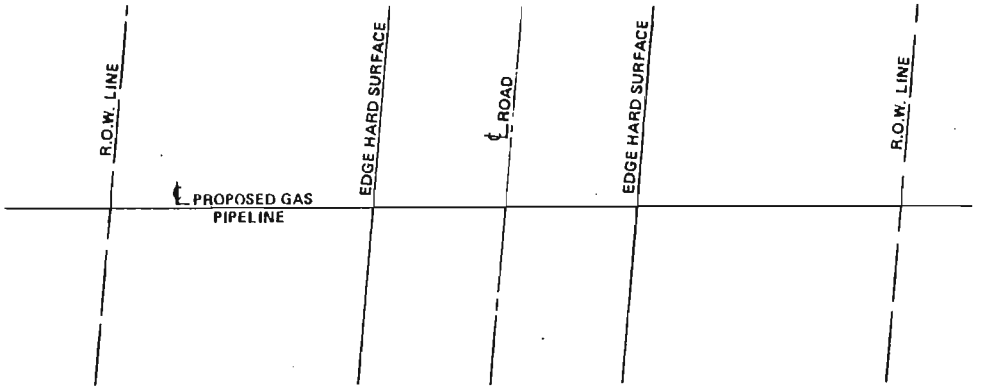

PLAN
N.T.S.

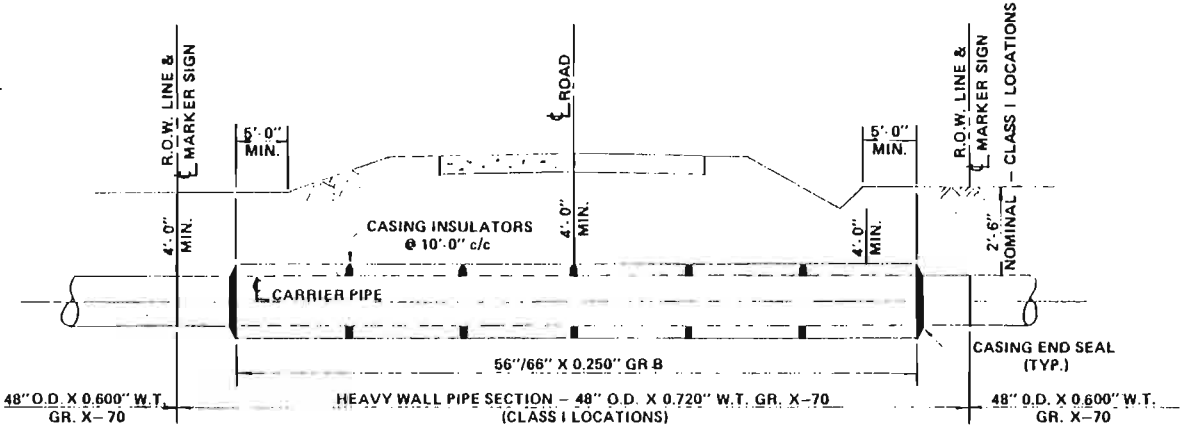

PROFILE
N.T.S.

DOCKET NO CP80
EXHIBIT ... Z-9.0
HEARING EXHIBIT NO

GENERAL NOTES

1. IN NON-FROST SUSCEPTABLE AREAS WHERE CONVENTIONAL TRENCH CONFIGURATION IS USED, THE CASING DIAMETER SHALL BE 56 INCHES. CASING VENTS WILL NOT BE USED. THE CASING SHALL BE FILLED WITH A NON-WATER SOLUBLE, INERT CASING FILLER. IN FROST SUSCEPTIBLE SOIL AREAS WHERE PIPE INSULATION IS USED, THE CASING DIAMETER SHALL BE 66 INCHES. CASING VENTS WILL NOT BE USED. THE CASING SHALL BE FILLED WITH FOAM TYPE INSULATION.
2. PIPE WALL THICKNESS IN CLASS 2 LOCATIONS WILL BE 0.864".

DWG. NO. 4680-10-00-9-P-202

ALASKAN NORTHWEST NATURAL GAS TRANSPORTATION COMPANY

TYPICAL CASED ROAD CROSSING

ALASKA SEGMENT OF THE ALASKAN NATURAL GAS TRANSPORTATION SYSTEM

DRAWN SRBrandt	DATE 4/30/80	
CHEC	FIGURE	

E-11

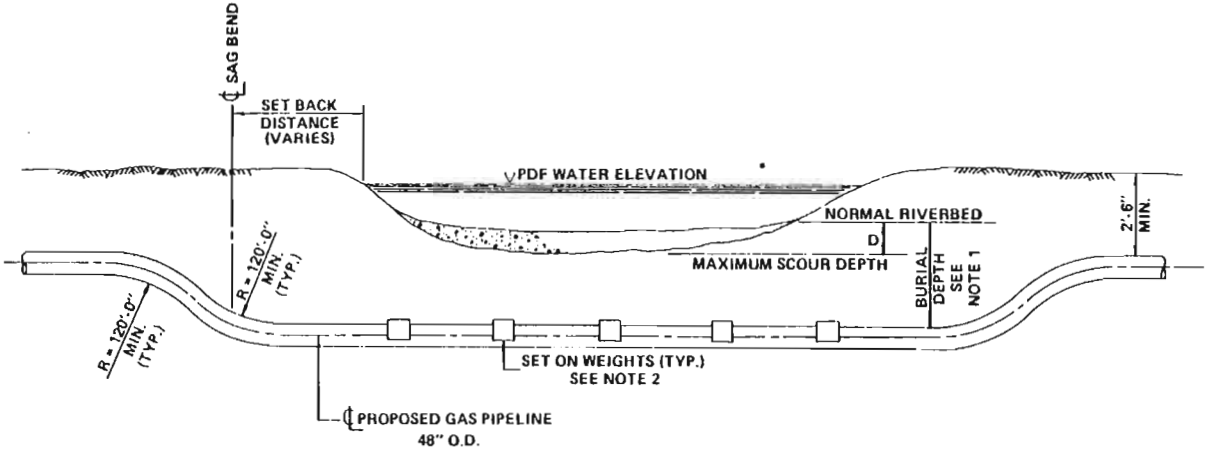

DOCKET NO CP80
EXHIBIT Z-9.0
HEARING EXHIBIT NO

GENERAL NOTES

1. BURIAL DEPTH AT RIVER CROSSINGS SHALL BE EQUAL TO 120% OF MAXIMUM SCOUR DEPTH, i.e., 120% (D), BUT NOT LESS THAN 4'-0" (FOUR FEET). BURIAL DEPTH TO BE MEASURED FROM NORMAL RIVERBED TO TOP OF WEIGHT.
2. WEIGHT SIZE AND SPACING AS FOLLOWS:
   a). BARE PIPE
   0.600" W.T. ..... 13,500# @ 13'-0" c.c.
   0.720" W.T. ..... 13,500# @ 15'-0" c.c.
   b). INSULATED PIPE
   0.600" W.T. ..... 25,000# @ 14'-0" c.c.
   0.720" W.T. ..... 25,000# @ 14'-0" c.c.
3. IN FROST SUSCEPTIBLE SOIL AREAS, 6" OF INSULATION PLUS OVER EXCAVATION AND REPLACEMENT OF FROST SUSCEPTIBLE SOILS WITH NON-FROST SUSCEPTIBLE BACK-FILL WILL BE REQUIRED.
4. WEIGHT SIZE AND SPACING BASED ON A SPECIFIC GRAVITY OF 1.00, A NEGATIVE BUOYANCY OF 5%, AND A CONCRETE DENSITY OF 140 PCF.
5. PDF = PIPELINE DESIGN FLOOD.

DWG. NO. 4880-10-00-0-P-301

ALASKAN NORTHWEST NATURAL GAS TRANSPORTATION COMPANY

TYPICAL RIVER CROSSING
SET ON WEIGHTS

ALASKA SEGMENT OF THE ALASKAN NATURAL GAS TRANSPORTATION SYSTEM

FLUOR J R Brandt	DATE 4/30/80		
CHEC	FIGURE		

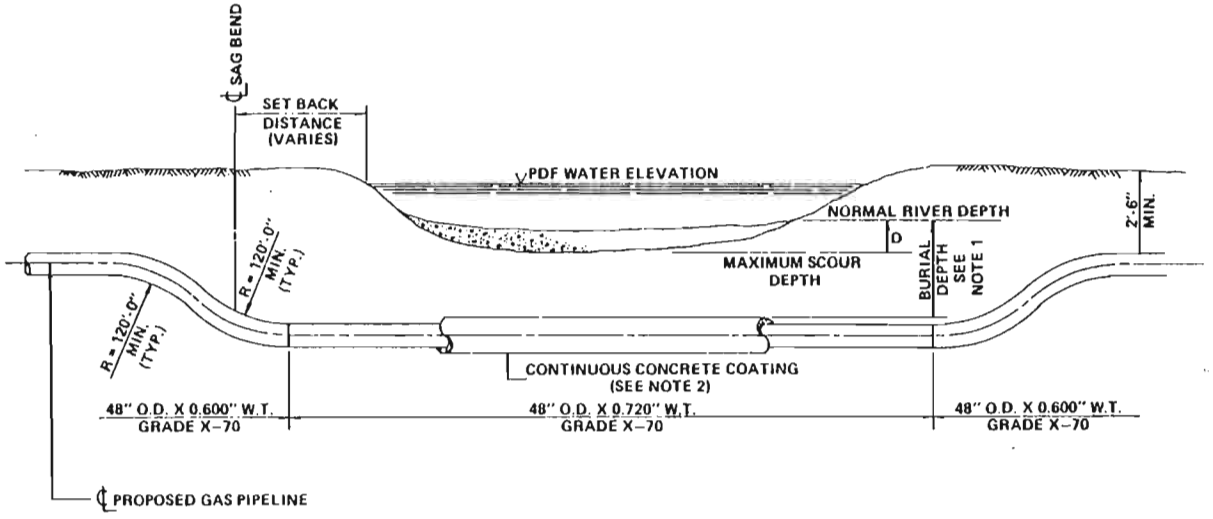

DOCKET NO CP80
EXHIBIT Z-9.0
HEARING EXHIBIT NO

GENERAL NOTES

1. BURIAL DEPTH AT RIVER CROSSINGS SHALL BE EQUAL TO 120% OF MAXIMUM SCOUR DEPTH, ie., 120% (D), BUT NOT LESS THAN 4'-0" (FOUR FEET). BURIAL DEPTH TO BE MEASURED FORM NORMAL RIVERBED TO TOP OF CONCRETE COATING'
2. CONCRETE COATING THICKNESS FOR PIPE WITH INSULATION;

   0.600" W. T. ..... 6 ½"
   0.720" W. T. ..... 6 ¼"

   FIGURES BASED ON A SPECIFIC GRAVITY PLUS 5% NEGATIVE BUOYANCY OF 1.05 AND A CONCRETE DENSTIY OF 190.
3. IN FROST SUSCEPTIBLE SOIL AREAS, 6" OF INSULATION PLUS OVER EXCAVATION AND REPLACEMENT OF FROST SUSCEPTIBLE BACK-FILL WILL BE REQUIRED.
4. PDF = PIPELINE DESIGN FLOOD.

DWG. NO. 4680-10-00-9-P-304

ALASKAN NORTHWEST NATURAL
GAS TRANSPORTATION COMPANY

TYPICAL RIVER CROSSING
CONCRETE COATED

ALASKA SEGMENT OF THE ALASKAN NATURAL GAS TRANSPORTATION SYSTEM

ENGR	J R Brandt	DATE	4/30/80
CHIEF		FIGURE	

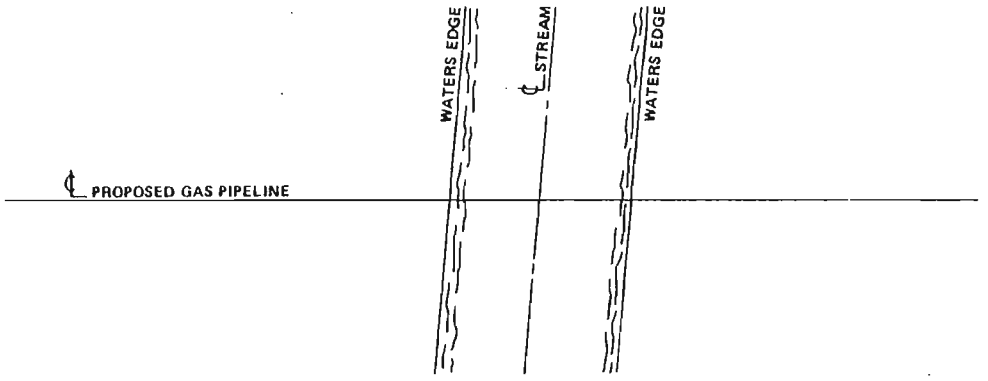

PLAN
N.T.S.

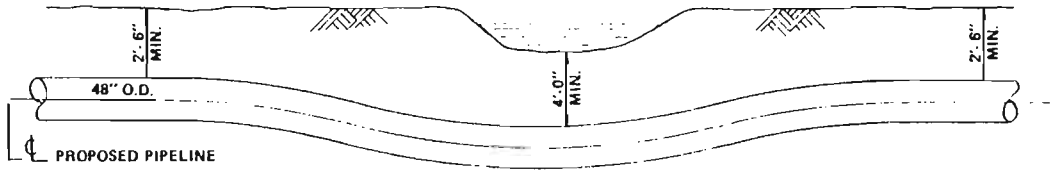

PROFILE
N.T.S.

DOCKET NO CP80
EXHIBIT Z-9.0
HEARING EXHIBIT NO

GENERAL NOTES

DWG. NO. 4880-10-00-9-P-305

ALASKAN NORTHWEST NATURAL GAS TRANSPORTATION COMPANY

TYPICAL UNWEIGHTED STREAM CROSSING

ALASKA SEGMENT OF THE ALASKAN NATURAL GAS TRANSPORTATION SYSTEM

FLDOR	J R Brandt	DATE 4/30/80	
GIEC	[illegible] 4/22/80	FIGURE	

DOCKET NO CP80 . . .
EXHIBIT Z-9.0
HEARING EXHIBIT NO . .

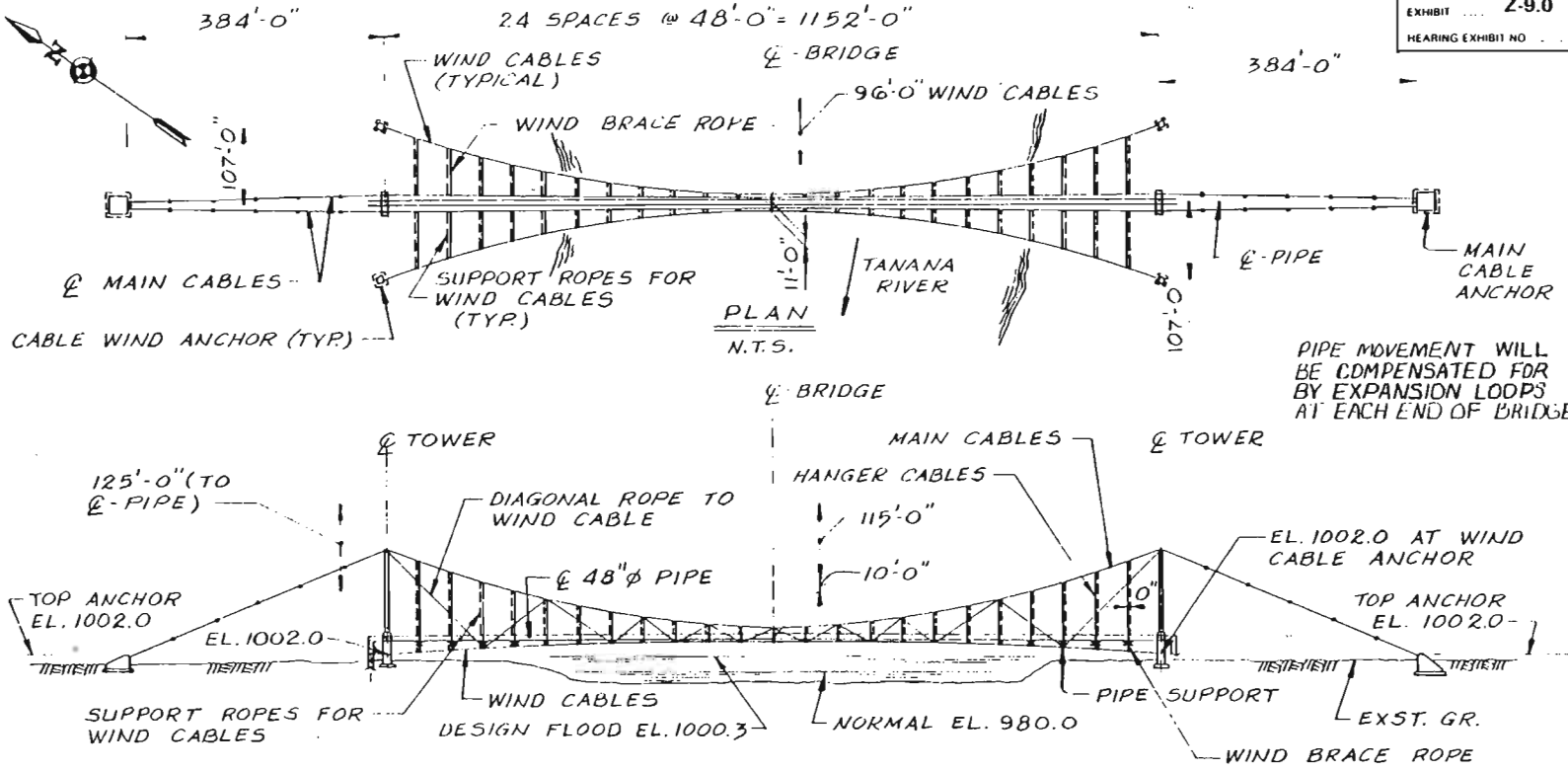

SEE DWG. NO. 4680-10-00-9-P-312 FOR TYPICAL CROSS SECTION AT MIDSPAN.

DWG. NO. 4680-10-00-9-P-310

ALASKAN NORTHWEST NATURAL GAS TRANSPORTATION COMPANY

CABLE SUSPENSION BRIDGE DETAILS LOWER TANANA RIVER CROSSING

ALASKA SEGMENT OF THE ALASKAN NATURAL GAS TRANSPORTATION SYSTEM

FLUOR JR Brandt	DATE 4/30/80	
MB JR. 4/24/80	FIGURE	5/14

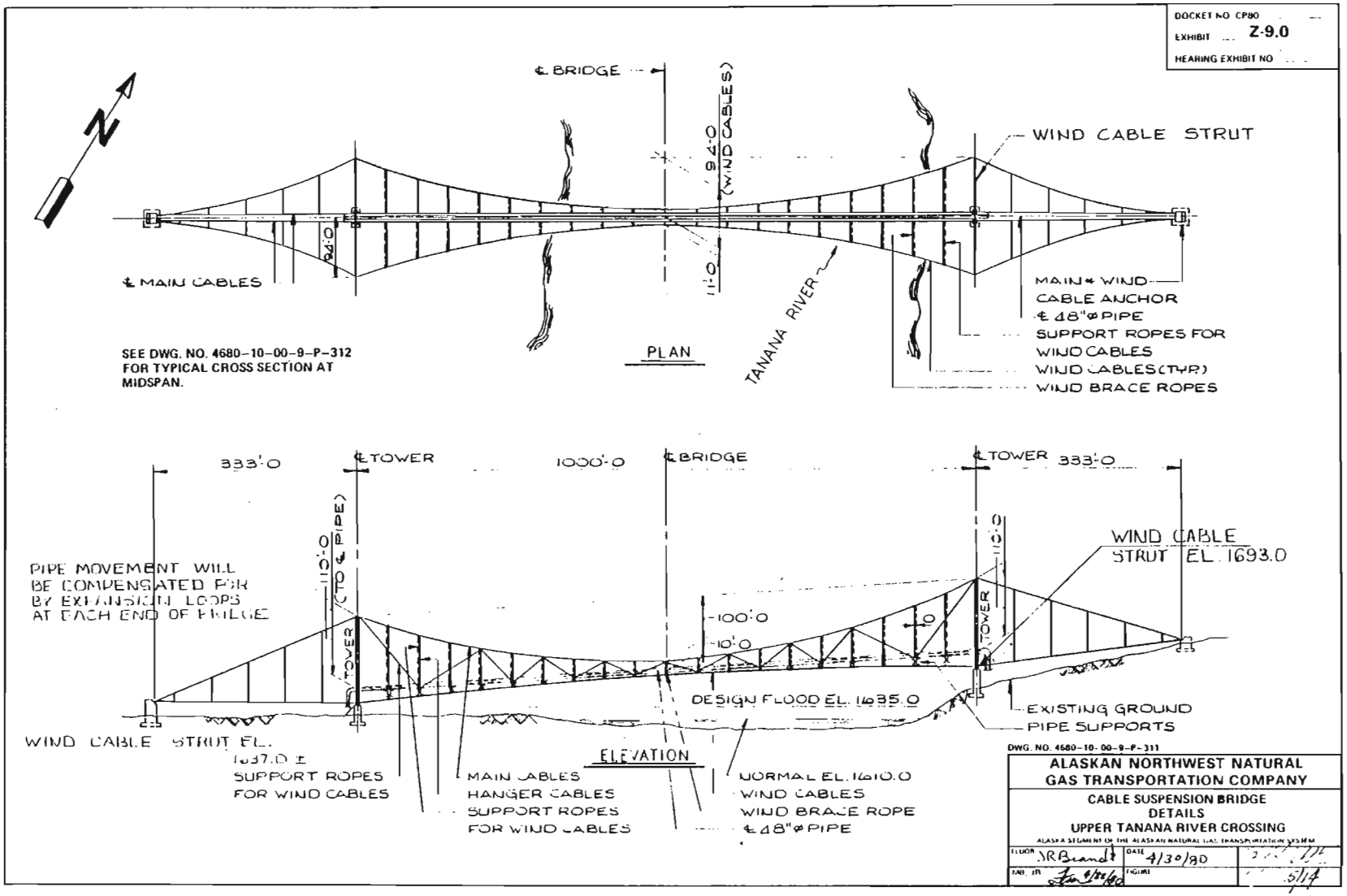

FIGURE E-15

MAY, 1980

DOCKET NO CP80
EXHIBIT Z-9.0
HEARING EXHIBIT NO

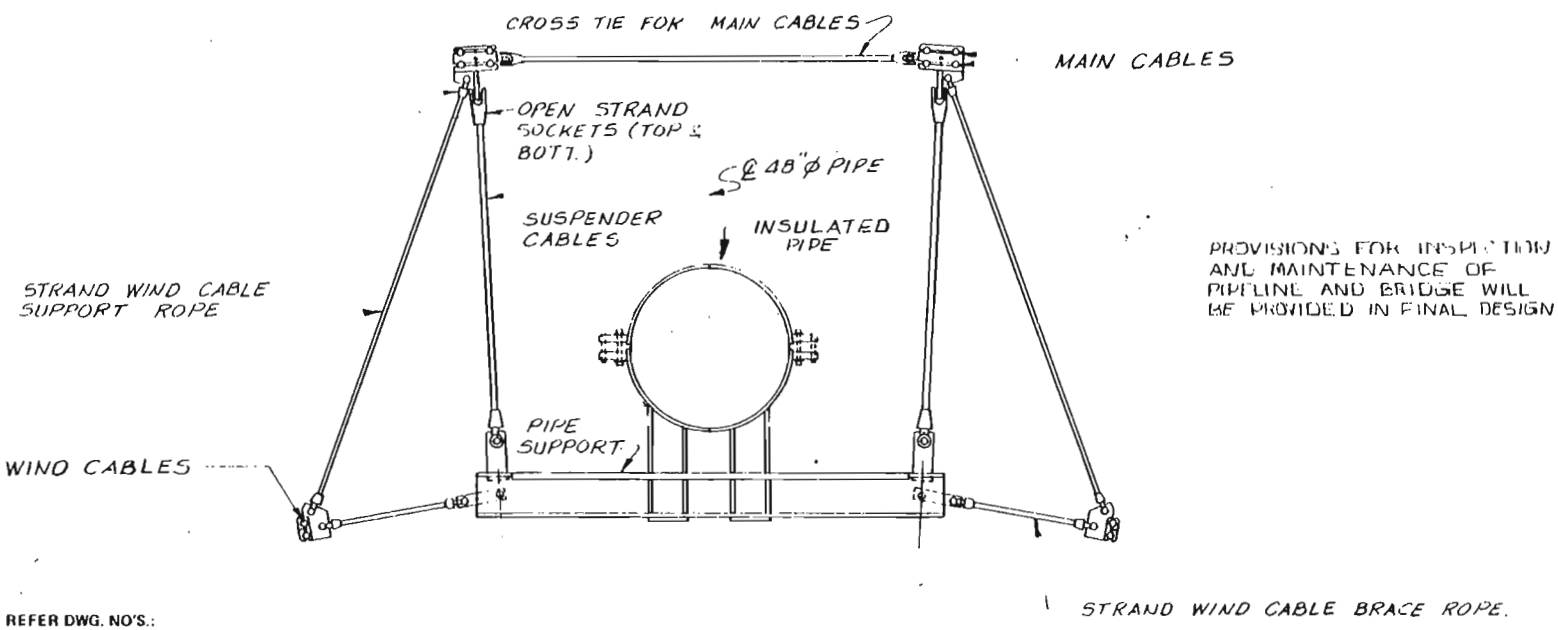

REFER DWG. NO'S.:
4680-10-00-9-P-310
4680-10-00-9-P-311

TYPICAL CROSS SECTION
N.T.S.

DWG. NO. 4680-10-00-9-P-312

ALASKAN NORTHWEST NATURAL GAS TRANSPORTATION COMPANY

CABLE SUSPENSION BRIDGE
TYPICAL CROSS SECTION
AT MIDSPAN

ALASKA SEGMENT OF THE ALASKAN NATURAL GAS TRANSPORTATION SYSTEM

FLOOR	JRBrandt	DATE 4/30/80	
MD. JR.	[illegible] 4/24/80	FIGURE	54

DOCKET NO. CP80
EXHIBIT Z-9.0
HEARING EXHIBIT NO.

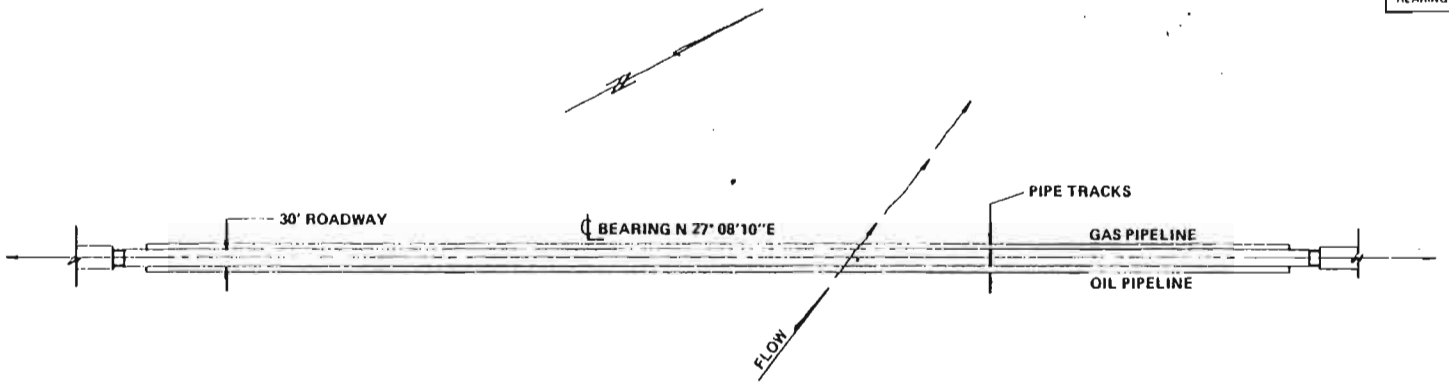

PLAN
N.T.S.

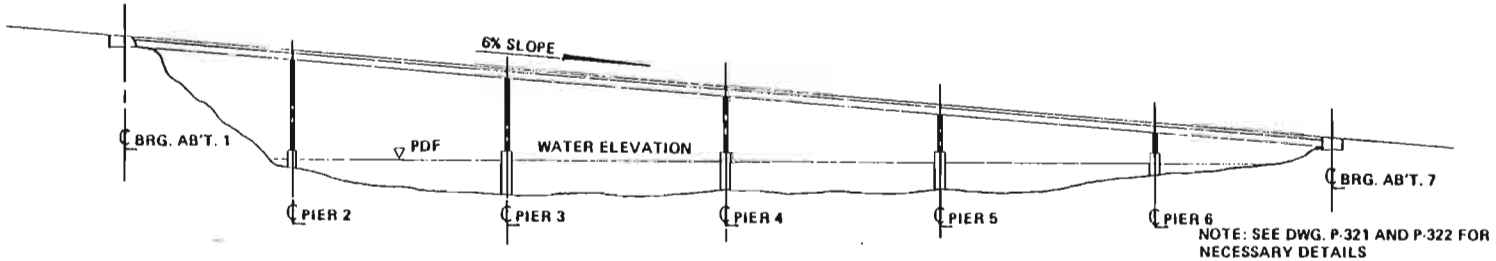

NOTE: SEE DWG. P-321 AND P-322 FOR NECESSARY DETAILS

PROFILE
N.T.S.

DWG. NO. 4680-10.00-8-P-320

ALASKAN NORTHWEST NATURAL GAS TRANSPORTATION COMPANY

YUKON BRIDGE PLAN AND PLOT

ALASKA SEGMENT OF THE ALASKAN NATURAL GAS TRANSPORTATION SYSTEM

FLUOR SRBrandt	DATE 4/30/80	
MMC	ENGINE	

DOCKET NO CP80
EXHIBIT Z-9.0
HEARING EXHIBIT NO

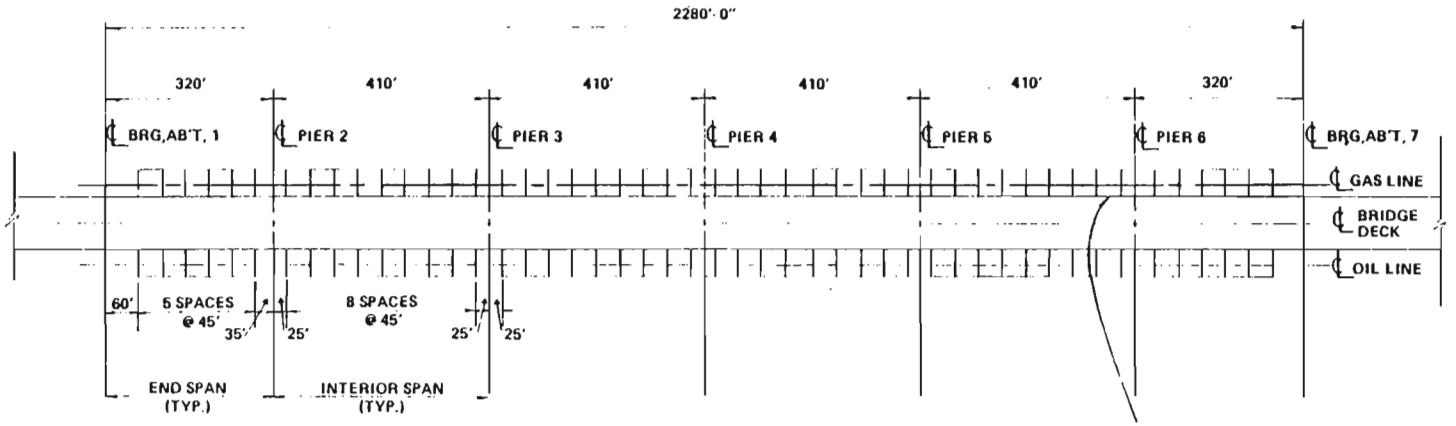

PLAN VIEW
N.T.S.

REF. DWG. P-320 AND P-322

DWG. NO. 4680-10-00-9-P-321

ALASKAN NORTHWEST NATURAL GAS TRANSPORTATION COMPANY

PIPELINE SUPPORT SPACING ON YUKON BRIDGE

ALASKA SEGMENT OF THE ALASKAN NATURAL GAS TRANSPORTATION SYSTEM

FLUOR J R Brown Jr	DATE 1/30/80	
THEC	FIGURE	

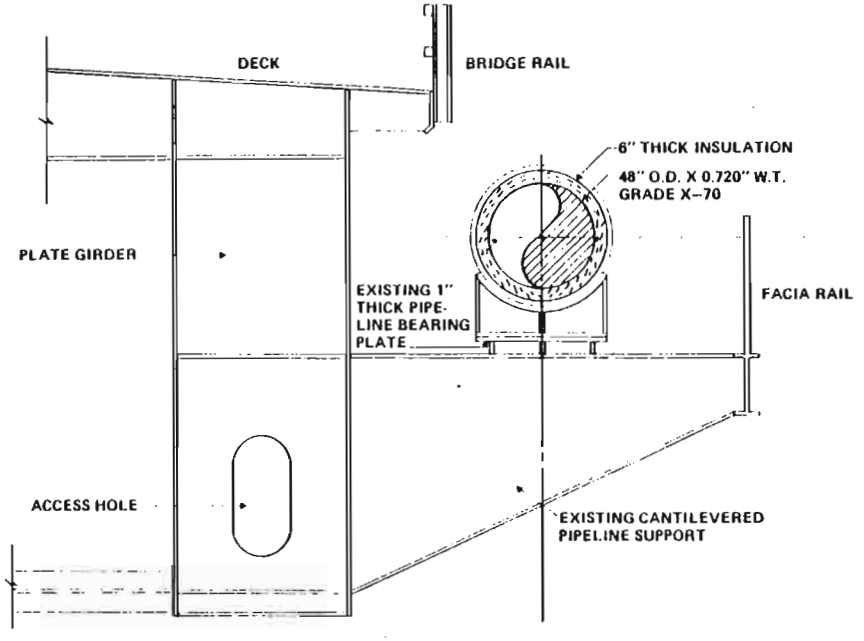

TYPICAL CROSS SECTION

N.T.S.

DOCKET NO CP80
EXHIBIT Z-9.0
HEARING EXHIBIT NO

GENERAL NOTES

1. PIPE SUPPORTED ON FREE SLIDING CRADLE SUPPORTS TO ALLOW PIPE EXPANSION FROM MIDDLE OF BRIDGE TOWARD ABUTMENTS.

REF. DWG. NO. P-320 AND P-321

DWG. NO. 4680-10-00-B-P-322

ALASKAN NORTHWEST NATURAL GAS TRANSPORTATION COMPANY

TYPICAL PIPELINE SUPPORT DETAILS
YUKON RIVER BRIDGE

ALASKA SEGMENT OF THE ALASKAN NATURAL GAS TRANSPORTATION SYSTEM

FLUOR	SR Brandt	DATE	4/30/80
GIEC		FIGURE	

DOCKET NO. CP80 _____
EXHIBIT _____
HEARING EXHIBIT NO. _____

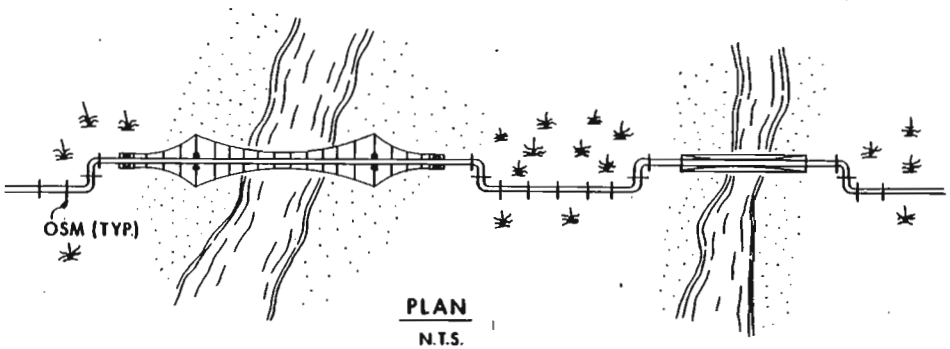

PLAN
N.T.S.

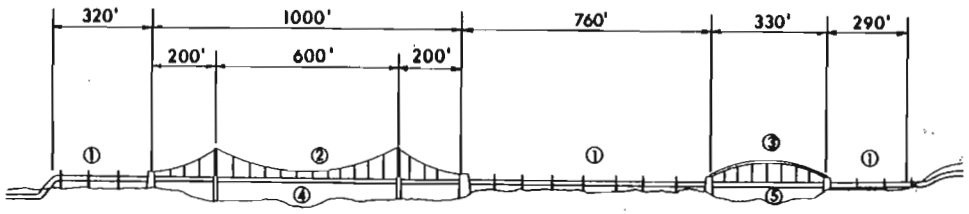

PROFILE
N.T.S.

GENERAL NOTES

1. SEE DWG. 4680-10-00-9-P-331 FOR TYPICAL OVERHEAD SUPPORT MEMBERS
2. SEE DWG. 4680-10-00-9-P-332 FOR SUSPENSION BRIDGE
3. SEE DWG. 4680-10-00-9-P-333 FOR STEEL ARCH BRIDGE
4. DISTANCE BETWEEN AVERAGE STREAM BED AND BOTTOM STEEL IS 30'
5. DISTANCE BETWEEN AVERAGE STREAM BED ELEVATION AND BOTTOM STEEL IS 25'

DWG NO. 4680-10-00-9-P-330

ALASKAN NORTHWEST NATURAL GAS TRANSPORTATION COMPANY

MIDDLE FORK KOYUKUK/HAMMOND
PLAN AND PROFILE

ALASKA SEGMENT OF THE ALASKAN NATURAL GAS TRANSPORTATION SYSTEM

FLUOR RSM	DATE	
CHEC/NSU	FIGURE	

GULF INTERSTATE ENGINEERING COMPANY/
MICHAEL BAKER, JR., INC.
A Joint Venture

E20A

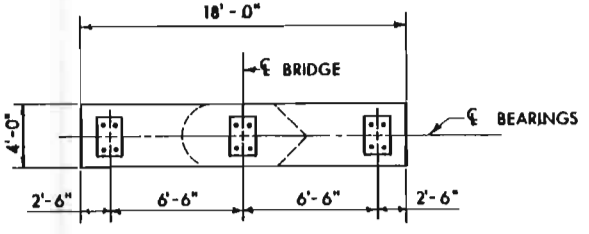

PLAN - PIER CAP
N.T.S.

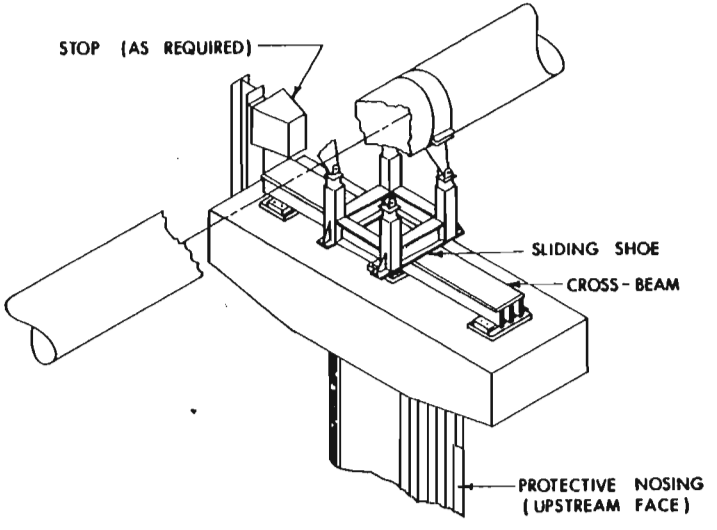

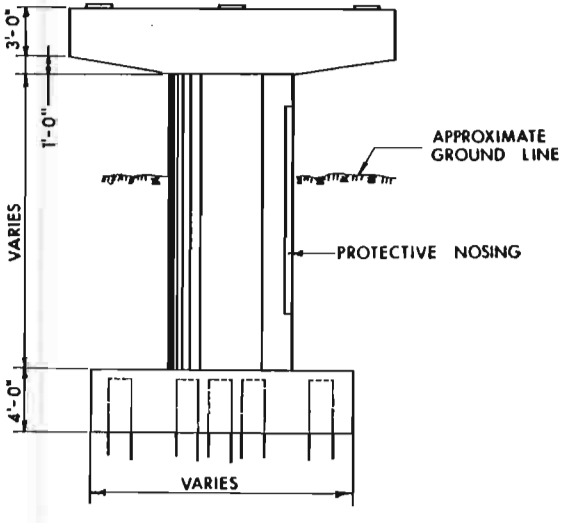

ELEVATION
N.T.S.

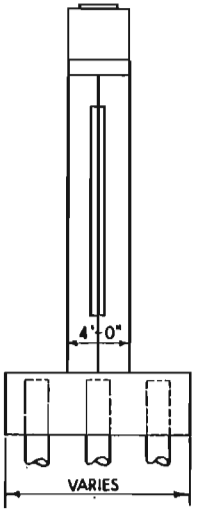

END VIEW
N.T.S.

DOCKET NO. _____
EXHIBIT _____
HEARING EXHIBIT NO. _____

GENERAL NOTES

1. SEE DWG. NO. 4680-10-00-9-P-330 FOR PLAN AND PROFILE OF MIDDLE FORK KOYUKUK / HAMMOND CROSSING COMPLEX

DWG. NO. 4860-10-00-9-P-331

ALASKAN NORTHWEST NATURAL GAS TRANSPORTATION COMPANY

MIDDLE FORK KOYUKUK/HAMMOND
TYPICAL OVERHEAD SUPPORT MEMBER

ALASKA SEGMENT OF THE ALASKAN NATURAL GAS TRANSPORTATION SYSTEM

FLUOR	DATE	
CHEC/MBJ	FIGURE	

GULF INTERSTATE ENGINEERING COMPANY/
MICHAEL BAKER, JR., INC.
A Joint Venture

E208

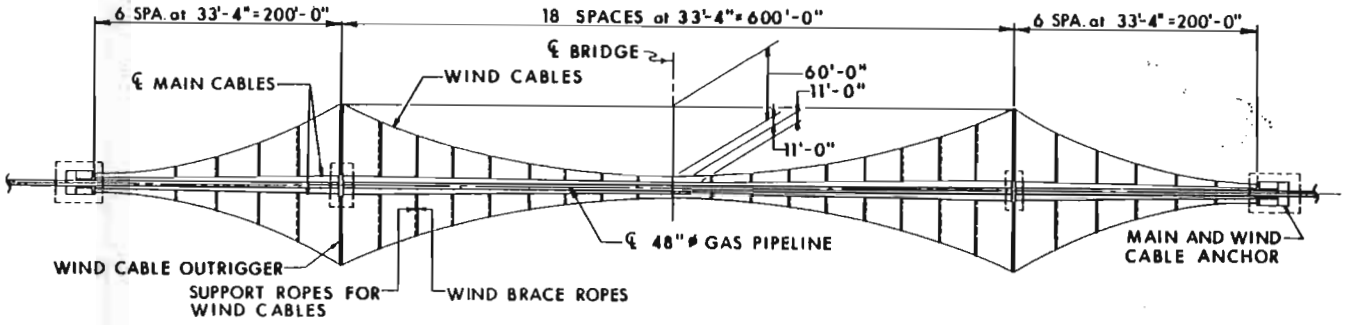

PLAN
N.T.S.

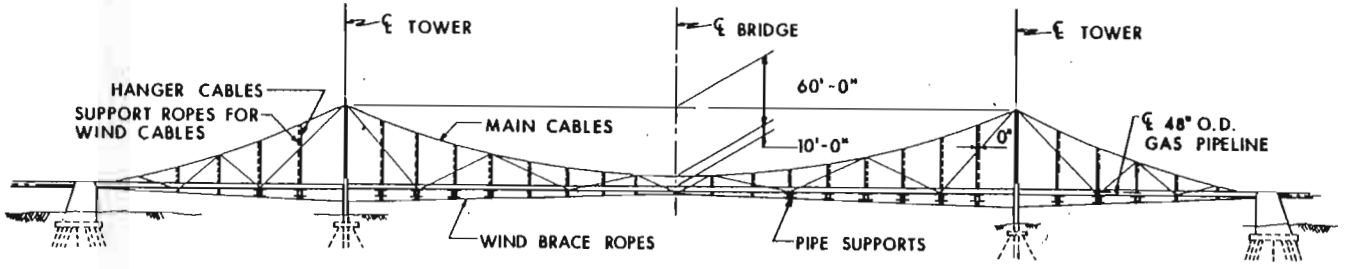

ELEVATION
N.T.S.

E20C

GENERAL NOTES

1. SEE DWG. 4680-10-00-9-P-312 FOR CABLE SUSPENSION BRIDGE TYPICAL CROSS SECTION AT MIDSPAN
2. SEE DWG. 4680-10-00-9-P-330 FOR PLAN AND PROFILE OF MIDDLE FORK KOYUKUK / HAMMOND CROSSING COMPLEX.

DOCKET NO. ...
EXHIBIT
HEARING EXHIBIT NO.

DWG. NO. 4680-10-00-9-P-332

ALASKAN NORTHWEST NATURAL GAS TRANSPORTATION COMPANY

CABLE SUSPENSION BRIDGE
DETAILS
MIDDLE FORK KOYUKUK RIVER CROSSING
ALASKA SEGMENT OF THE ALASKAN NATURAL GAS TRANSPORTATION SYSTEM

FLUOR R SM	DATE	
CHEC [illegible]	FIGURE	

GULF INTERSTATE ENGINEERING COMPANY / MICHAEL BAKER, JR., INC.
A Joint Venture

DOCKET NO. CP80 ____
EXHIBIT ____
HEARING EXHIBIT NO. ____

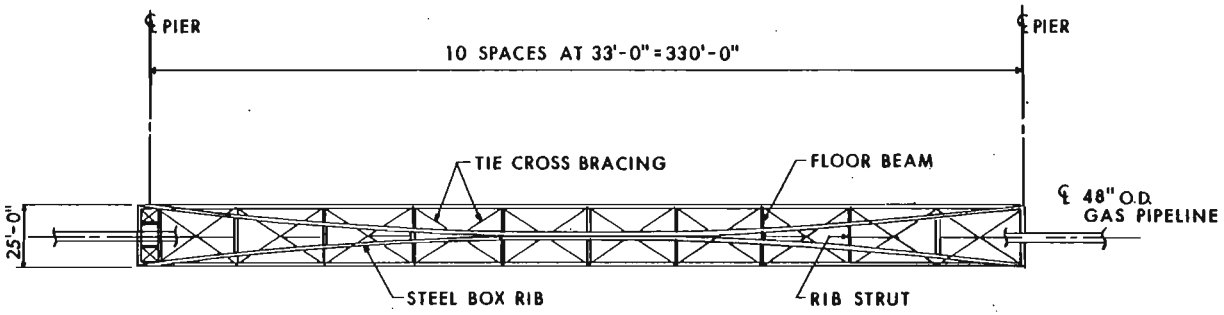

PLAN
N.T.S.

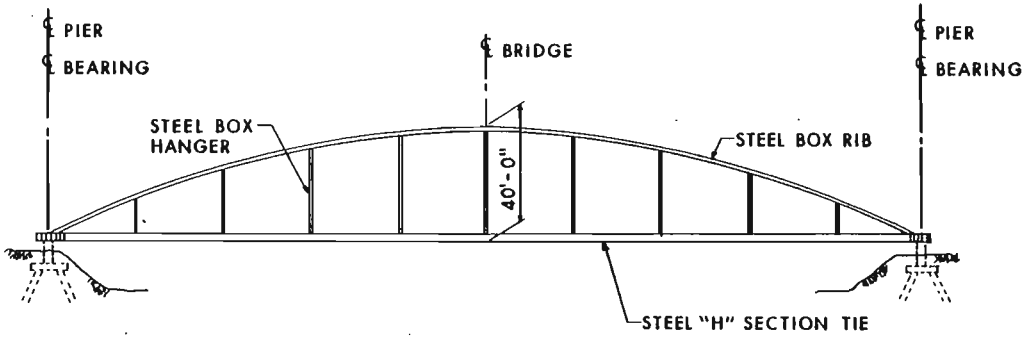

ELEVATION
N.T.S.

GENERAL NOTES

1. SEE DWG. NO. 4680-10-00-9-P-334 FOR HAMMOND RIVER, STEEL ARCH BRIDGE CROSS SECTION.
2. SEE DWG. NO. 4680-10-00-9-P-330 FOR PLAN AND PROFILE OF MIDDLE FORK KOYUKUK / HAMMOND CROSSING COMPLEX

DWG. NO. 4680-10-00-9-P-333

ALASKAN NORTHWEST NATURAL GAS TRANSPORTATION COMPANY

STEEL ARCH BRIDGE
DETAILS
HAMMOND RIVER CROSSING
ALASKA SEGMENT OF THE ALASKAN NATURAL GAS TRANSPORTATION SYSTEM

FLUOR	DATE	
QMEC/MBJ	FIGURE	

GULF INTERSTATE ENGINEERING COMPANY/ MICHAEL BAKER, JR., INC.
A Joint Venture

E 20 D

DOCKET NO. CP80 _____
EXHIBIT _____
HEARING EXHIBIT NO. _____

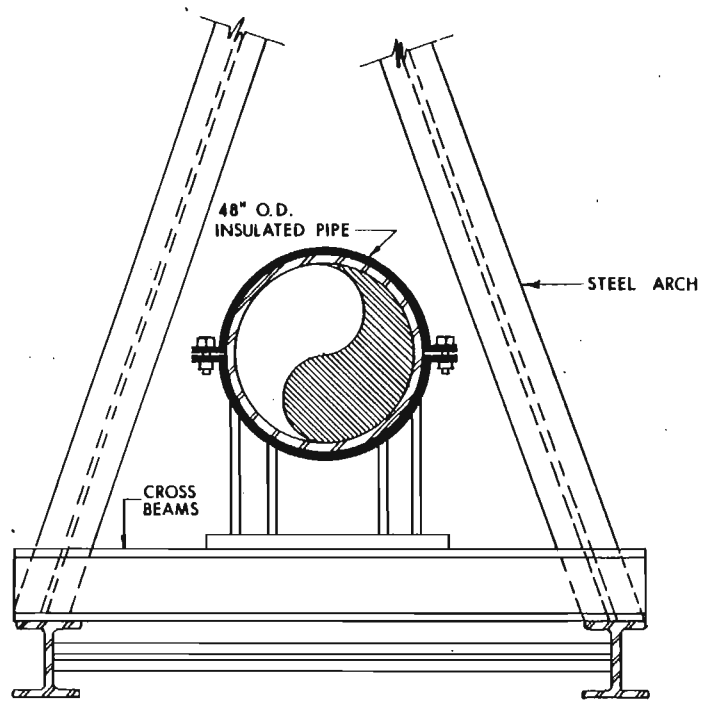

TYPICAL CROSS SECTION
N.T.S.

GENERAL NOTES

1. PROVISIONS FOR INSPECTION AND MAINTENANCE OF PIPELINE AND BRIDGE WILL BE PROVIDED IN FINAL DESIGN.
2. SEE DWG. NO. 4680-10-00-9-P-333 FOR PLAN AND PROFILE OF ARCH BRIDGE AT THE HAMMOND RIVER

DWG. NO. 4680-10-00-9-P-334

ALASKAN NORTHWEST NATURAL GAS TRANSPORTATION COMPANY

STEEL ARCH BRIDGE
CROSS SECTION
HAMMOND RIVER CROSSING
ALASKA SEGMENT OF THE ALASKAN NATURAL GAS TRANSPORTATION SYSTEM

FLUOR	DATE	
GIEC/MBJ	FIGURE	

GULF INTERSTATE ENGINEERING COMPANY/
MICHAEL BAKER, JR., INC.
A Joint Venture

E20E

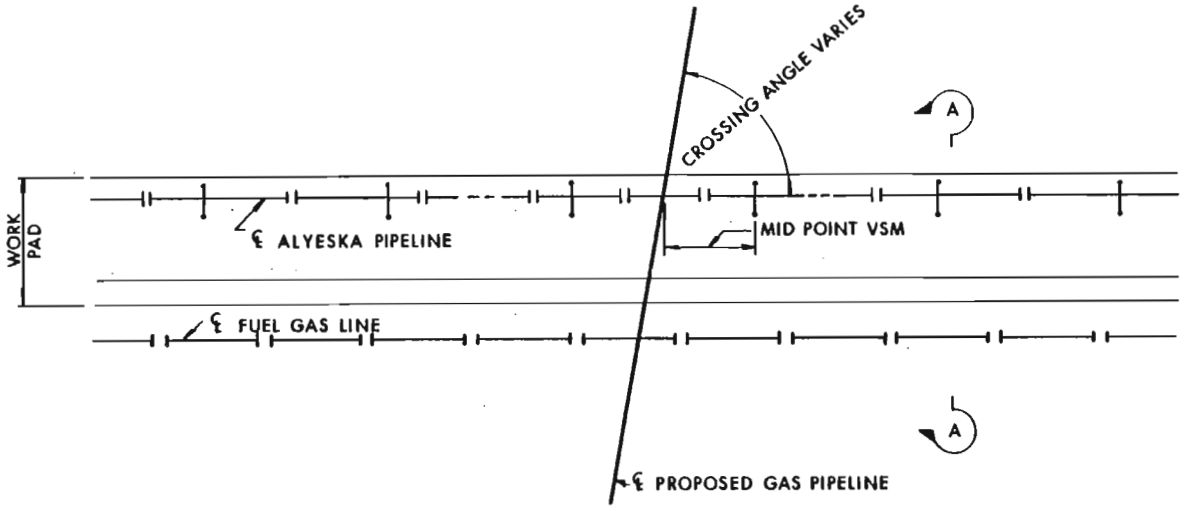

PLAN
N. T. S.

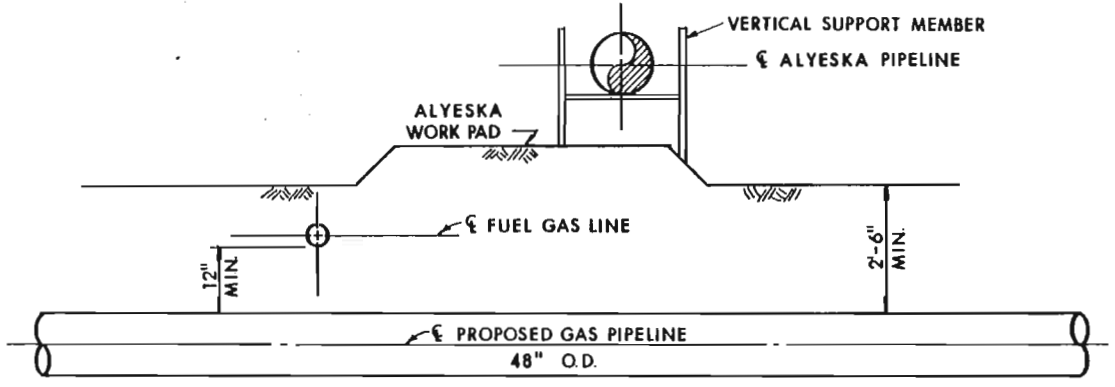

SECTION A-A
N. T. S.

GULF INTERSTATE ENGINEERING COMPANY/
MICHAEL BAKER, JR., INC.
A Joint Venture

DOCKET NO. [illegible]
EXHIBIT
HEARING EXHIBIT NO.

GENERAL NOTES

1. A MINIMUM CLEARANCE OF 15'-0" IS TO BE MAINTAINED BETWEEN VSM AND EDGE OF DITCH.
2. HEAVY WALL PIPE 0.720" W.T. WILL BE INSTALLED WITHIN THE R.O.W. LIMITS OF ALYESKA PIPELINE.
3. FOR WORKPAD CONSTRUCTION DETAILS AT CROSSINGS SEE DWG. NO. 4680-10-00-C-021 MISC. ON R.O.W. CONSTRUCTION.

DWG. NO. 4680-10-00-9-P-601 REV. 1

ALASKAN NORTHWEST NATURAL GAS TRANSPORTATION COMPANY

TYPICAL ALYESKA PIPELINE
CROSSING ABOVE GROUND
WITH ADJACENT FUEL GAS LINE

ALASKA SEGMENT OF THE ALASKAN NATURAL GAS TRANSPORTATION SYSTEM

FILE	DATE	
CHEC	FIGURE	

E21

DOCKET NO. CP80 _____
EXHIBIT _____
HEARING EXHIBIT NO. _____

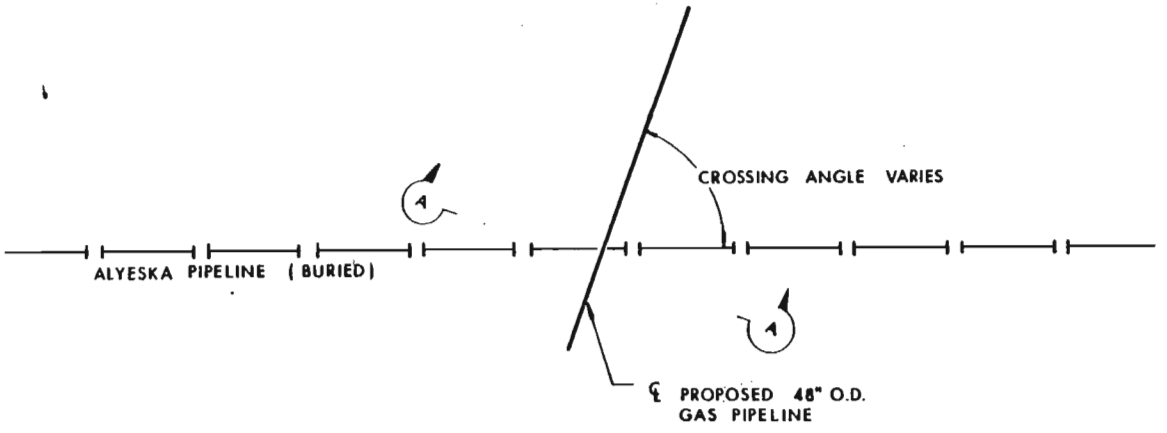

PLAN
N.T.S.

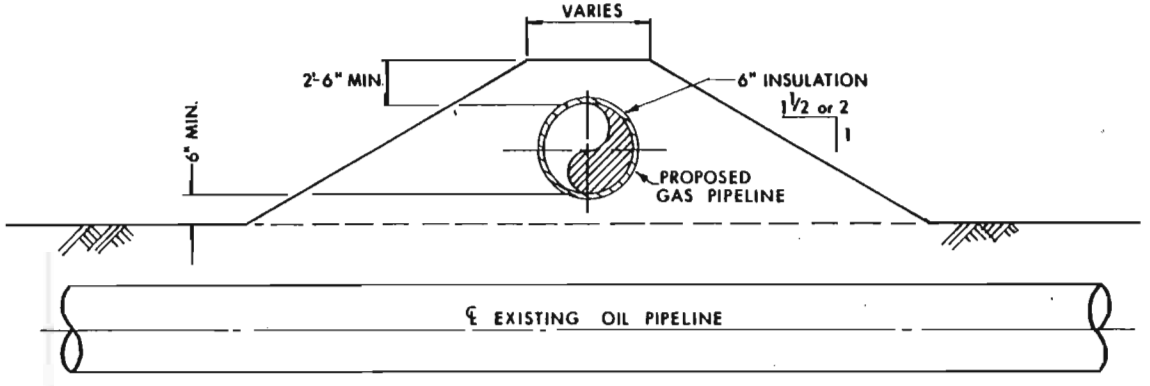

SECTION A-A
N.T.S.

GENERAL NOTES

1. HEAVY WALL PIPE 0.720" W.T. WILL BE INSTALLED WITHIN THE R.O.W. LIMITS OF ALYESKA PIPELINE.

2. FOR WORKPAD CONSTRUCTION DETAILS AT CROSSINGS - SEE DWG. NO. 4680-10-00-C-021 MISC. ON R.O.W. CONSTRUCTION.

DWG. NO. 4680-10-00-9-P-602 REV. 1

ALASKAN NORTHWEST NATURAL GAS TRANSPORTATION COMPANY

TYPICAL ALYESKA PIPELINE CROSSING BELOW GROUND

ALASKA SEGMENT OF THE ALASKAN NATURAL GAS TRANSPORTATION SYSTEM

FLUOR	DATE	
CHEC	FIGURE	

GULF INTERSTATE ENGINEERING COMPANY/
MICHAEL BAKER, JR., INC.
A Joint Venture

E-22

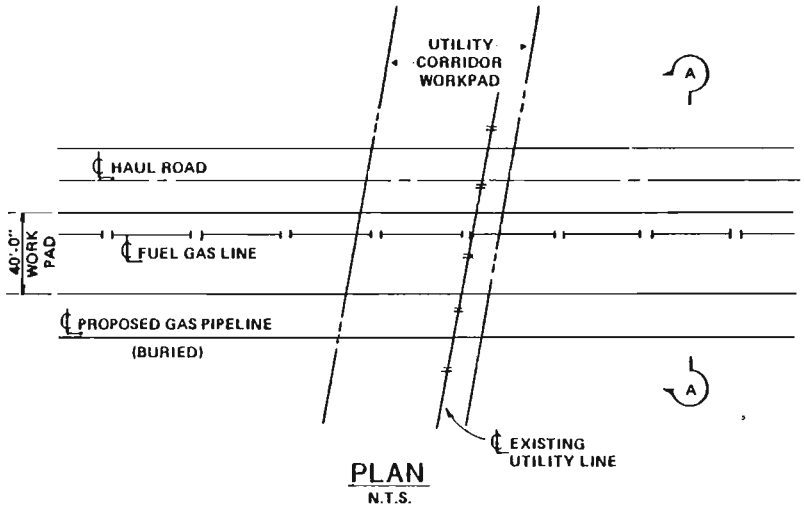

PLAN
N.T.S.

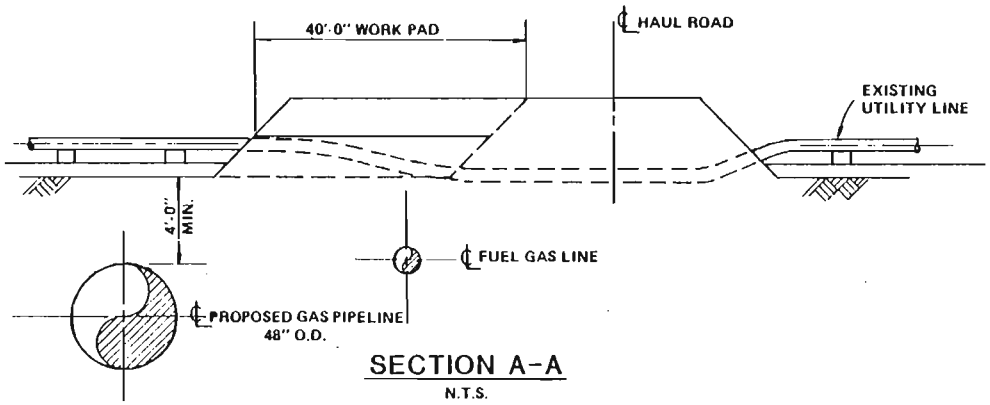

SECTION A-A
N.T.S.

DOCKET NO CP80
EXHIBIT Z-9.0
HEARING EXHIBIT NO

GENERAL NOTES

1. MINIMUM COVER UNDER UTILITY CORRIDOR TO BE 4'-0".
2. CLEARANCE BETWEEN GAS PIPELINE AND ANY FOREIGN FIPELINE, CONDUIT OR CABLES TO BE A MINIMUM OF 12".

DWG. NO. 4680-10-00-0-P-603

ALASKAN NORTHWEST NATURAL GAS TRANSPORTATION COMPANY

TYPICAL UTILITY CORRIDOR CROSSING

ALASKA SEGMENT OF THE ALASKAN NATURAL GAS TRANSPORTATION SYSTEM

FLUOR	J.R. Brand	DATE 4/30/80	
CHEC	4/24/80	FIGURE	5.1-3

DOCKET NO. [illegible]-80
EXHIBIT
HEARING EXHIBIT NO.

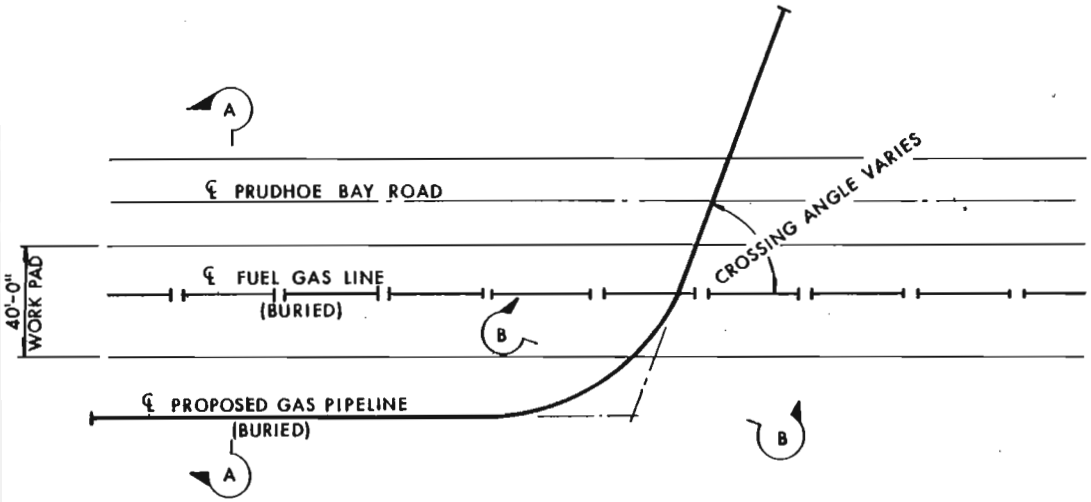

PLAN
N.T.S.

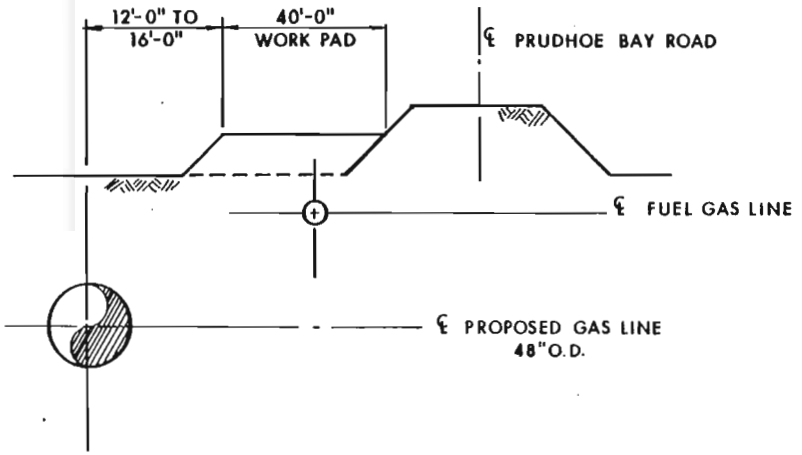

SECTION A-A
N.T.S.

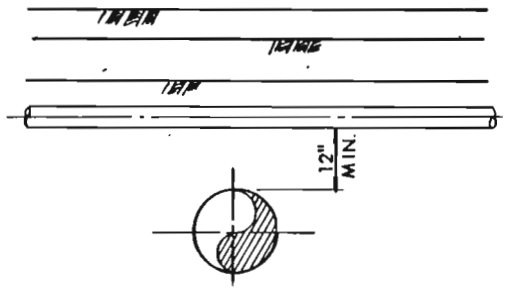

SECTION B-B
N.T.S.

GULF INTERSTATE ENGINEERING COMPANY/
MICHAEL BAKER, JR., INC.
A Joint Venture

GENERAL NOTES

1. HEAVY WALL PIPE 0.720" WT WILL BE INSTALLED WITHIN THE LIMITS OF THE PRUDHOE BAY ROAD R.O.W.
2. FOR WORK PAD CONSTRUCTION DETAILS AT CROSSINGS SEE DWG. NO. 4680-10-00-C-021 MISC. ON R.O.W. CONSTRUCTION.

DWG. NO. 4680-10-00-9-P-604 REV. 1

ALASKAN NORTHWEST NATURAL GAS TRANSPORTATION COMPANY

TYPICAL FUEL GAS LINE CROSSING

ALASKA SEGMENT OF THE ALASKAN NATURAL GAS TRANSPORTATION SYSTEM

FLUOR	DATE	
CHEC	FIGURE	

E 24

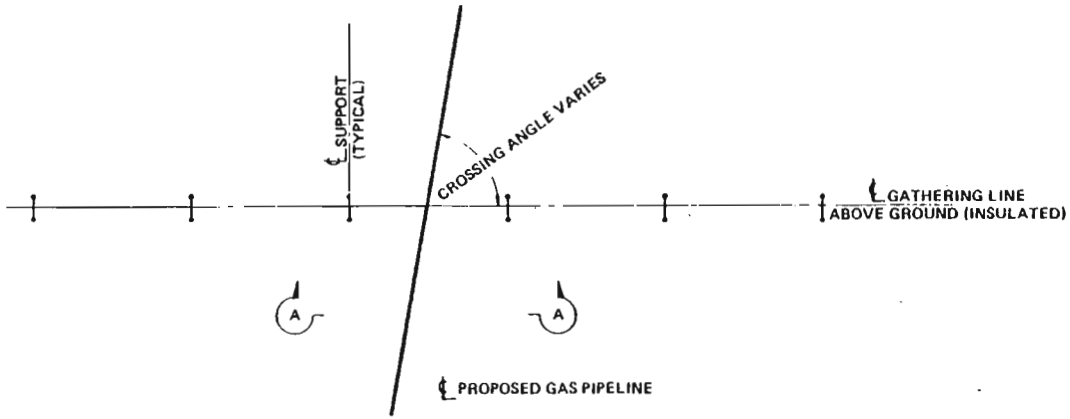

PLAN
N.T.S.

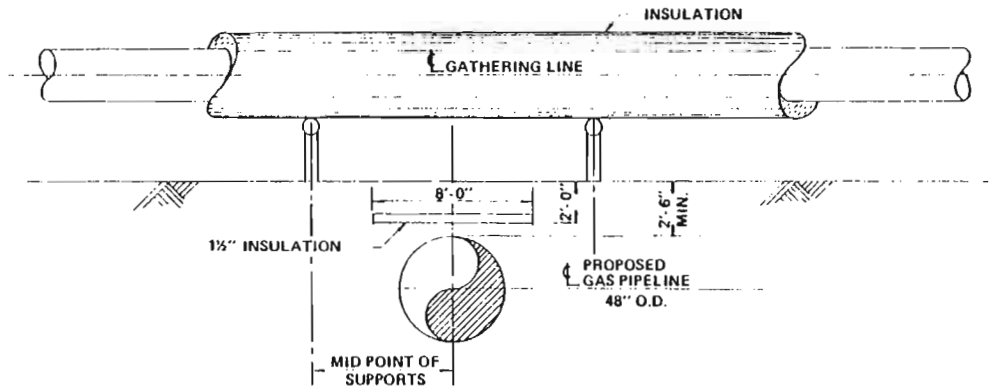

SECTION A-A
N.T.S.

DOCKET NO CP80
EXHIBIT Z-9.0
HEARING EXHIBIT NO

GENERAL NOTES

1. CONTINUE INSTALLATION OF 1½" INSULATION UNDER GATHERING LINE. PLACE INSULATION IN DITCH OVER PIPE PADDING MATERIAL BUT UNDER BACKFILL.

DWG. NO. 4680-10-00-9-P-805

ALASKAN NORTHWEST NATURAL GAS TRANSPORTATION COMPANY

ABOVE GROUND GATHERING LINE CROSSING

ALASKA SEGMENT OF THE ALASKAN NATURAL GAS TRANSPORTATION SYSTEM

FLDR	SRBandt	DATE 4/30/80	
GIEC	4/26/80	FIGURE	3/1.1

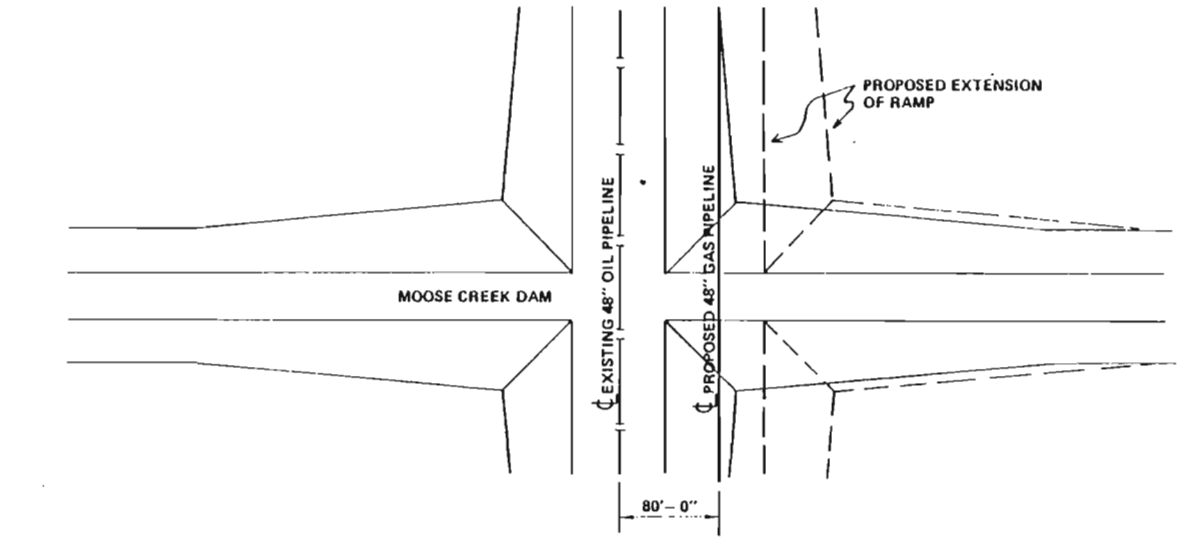

PLAN
N.T.S.

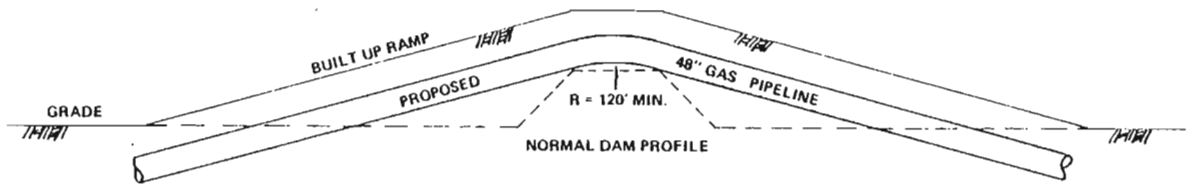

PROFILE
N.T.S.

DOCKET NO CP80
EXHIBIT Z-9.0
HEARING EXHIBIT NO

GENERAL NOTES

DWG. NO. 4680-10-00-9-P-606

ALASKAN NORTHWEST NATURAL
GAS TRANSPORTATION COMPANY

CHENA RIVER FLOOD PLAIN PROJECT
MOOSE CREEK DAM CROSSING

ALASKA SEGMENT OF THE ALASKAN NATURAL GAS TRANSPORTATION SYSTEM

DRAWN JRBrandt	DATE 4/30/80		
CHEC	FIGURE		5.1.1-9

DOCKET NO. CP80 ____
EXHIBIT ____
HEARING EXHIBIT NO. ____

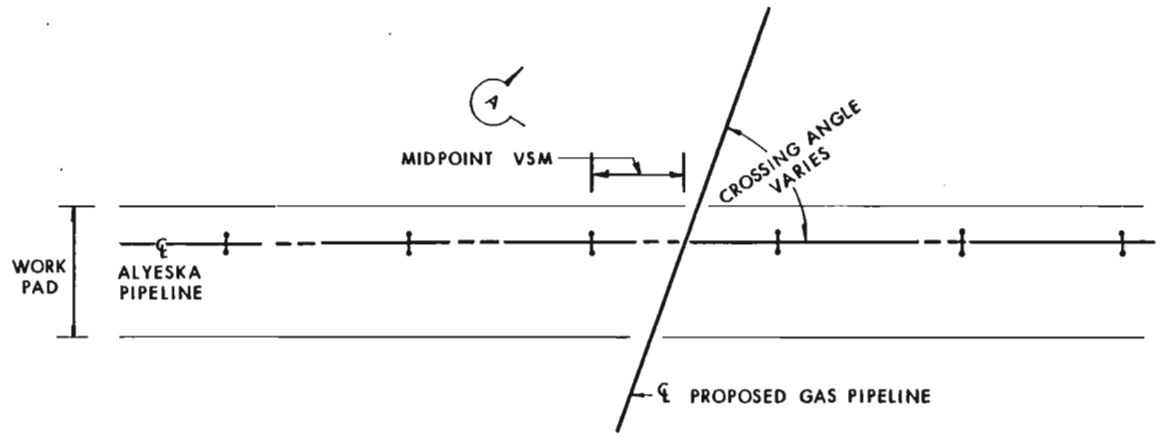

PLAN
N.T.S.

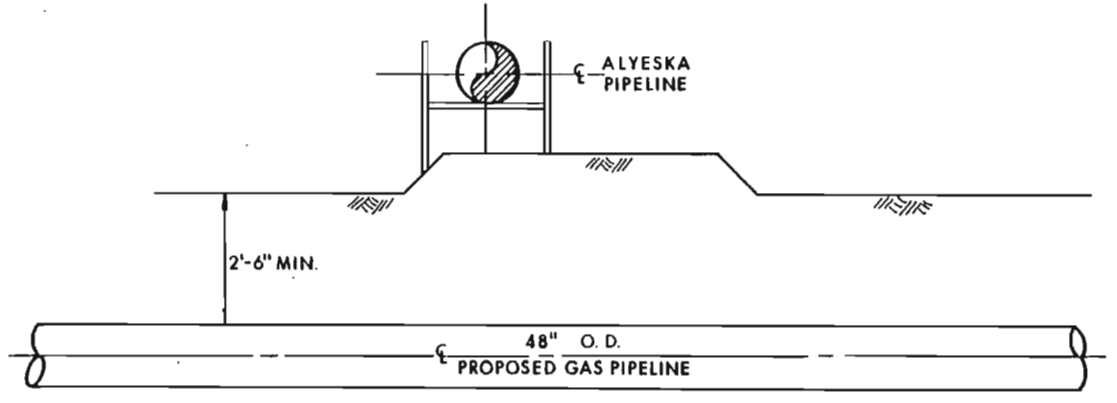

SECTION A-A
N.T.S.

GENERAL NOTES

1. A MINIMUM CLEARANCE OF 15'-0" IS TO BE MAINTAINED BETWEEN VSM AND EDGE OF DITCH.
2. HEAVY WALL PIPE 0.720" W.T. WILL BE INSTALLED WITHIN THE R.O.W. LIMITS OF ALYESKA PIPELINE.
3. FOR WORKPAD CONSTRUCTION DETAILS AT CROSSINGS SEE DWG. NO. 4680-10-00-C-021 MISC. ON R.O.W. CONSTRUCTION.

DWG. NO. 4680-10-00-9-P-607 REV. 1

ALASKAN NORTHWEST NATURAL GAS TRANSPORTATION COMPANY

TYPICAL ALYESKA CROSSING
ABOVE GROUND

ALASKA SEGMENT OF THE ALASKAN NATURAL GAS TRANSPORTATION SYSTEM

FLUOR	DATE	
CHEC 9/26/80	FIGURE	

GULF INTERSTATE ENGINEERING COMPANY/
MICHAEL BAKER, JR., INC.
A Joint Venture

E27

DOCKET NO. CP80 _____
EXHIBIT _____
HEARING EXHIBIT NO. _____

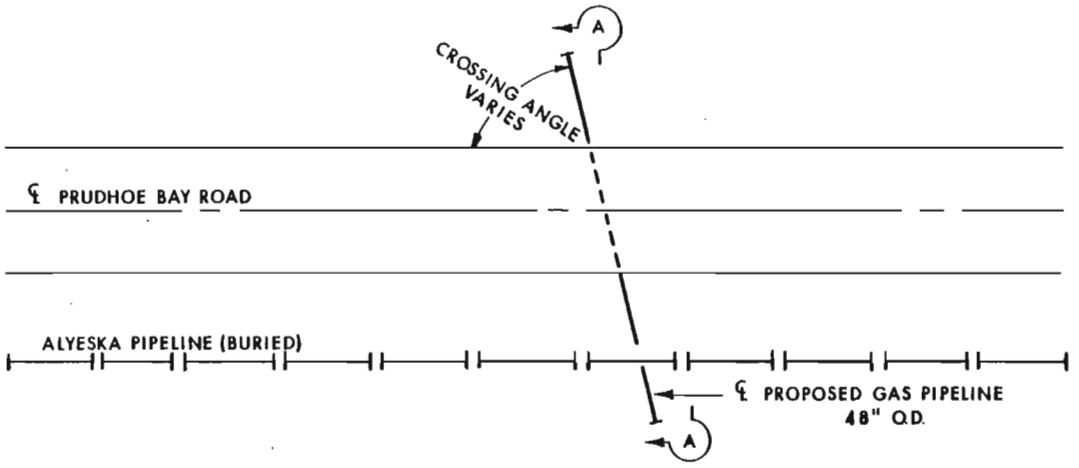

PLAN
N.T.S.

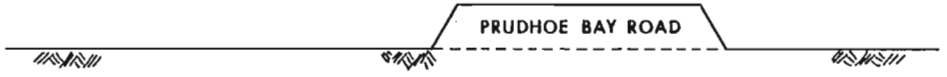

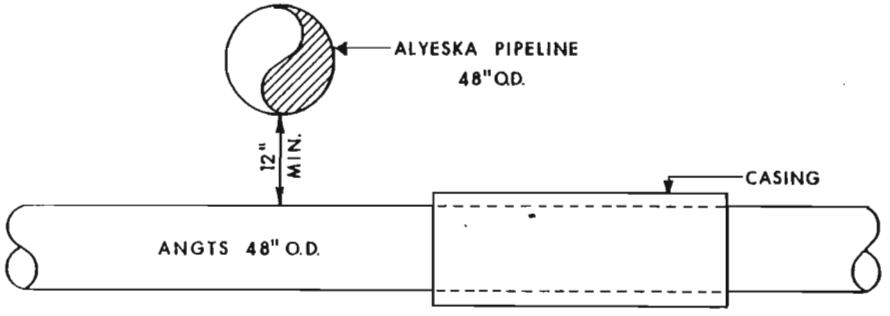

SECTION A-A
N.T.S.

GENERAL NOTES

1. HEAVY WALL PIPE 0.720" WT. WILL BE INSTALLED WITHIN THE R.O.W. LIMITS OF PRUDHOE BAY ROAD AND ALYESKA PIPELINE.
2. FOR WORK PAD CONSTRUCTION DETAILS AT CROSSING SEE DWG. NO. 4680-10-00-C-021 MISC. ON R.O.W. CONSTRUCTION.

GULF INTERSTATE ENGINEERING COMPANY/
MICHAEL BAKER, JR., INC.
A Joint Venture

DWG. NO. 4680-10-00-9-P-608

ALASKAN NORTHWEST NATURAL GAS TRANSPORTATION COMPANY

TYPICAL PRUDHOE BAY ROAD AND ALYESKA BELOW GROUND CROSSING

ALASKA SEGMENT OF THE ALASKAN NATURAL GAS TRANSPORTATION SYSTEM

FLUOR	DATE	
GNEC	FIGURE	

E-27A

DOCKET NO. UP80 _____
EXHIBIT _____
HEARING EXHIBIT NO. _____

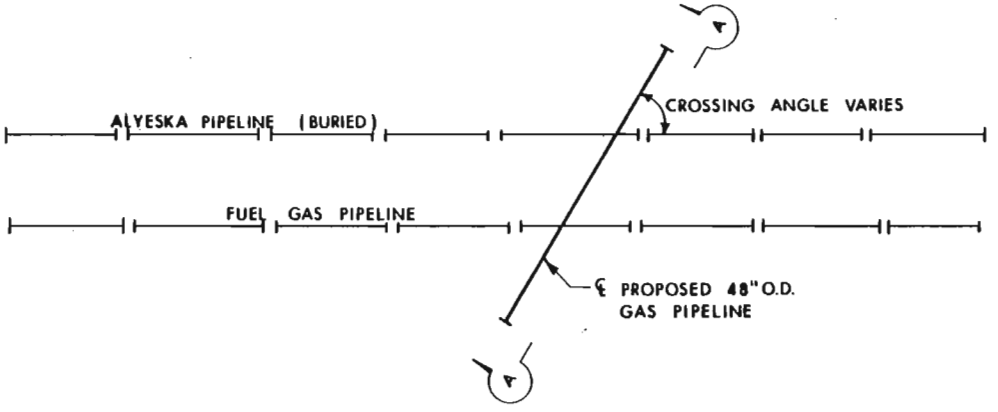

PLAN
N.T.S.

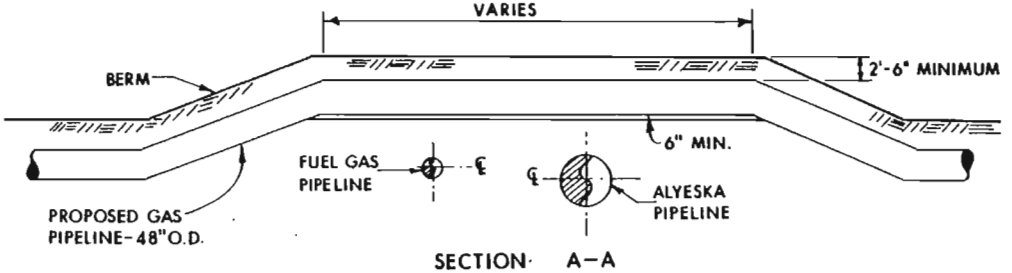

SECTION A-A
N.T.S.

GENERAL NOTES

1. HEAVY WALL PIPE 0.720" W.T. WILL BE INSTALLED WITHIN THE R.O.W. LIMITS OF ALYESKA PIPELINE.
2. FOR WORKPAD CONSTRUCTION DETAILS AT CROSSING - SEE DWG. NO.: 4680-10-00-C-021 MISC. ON R.O.W. CONSTRUCTION.

DWG. NO. 4680-10-00-9-P-609

ALASKAN NORTHWEST NATURAL GAS TRANSPORTATION COMPANY

TYPICAL ALYESKA AND FUEL GAS PIPELINE CROSSING BELOW GROUND

ALASKA SEGMENT OF THE ALASKAN NATURAL GAS TRANSPORTATION SYSTEM

FLUOR	DATE	
CHEC	FIGURE	

GULF INTERSTATE ENGINEERING COMPANY/
MICHAEL BAKER, JR., INC.
A Joint Venture

E27B

DOCKET NO CP80
EXHIBIT Z-9.0
HEARING EXHIBIT NO

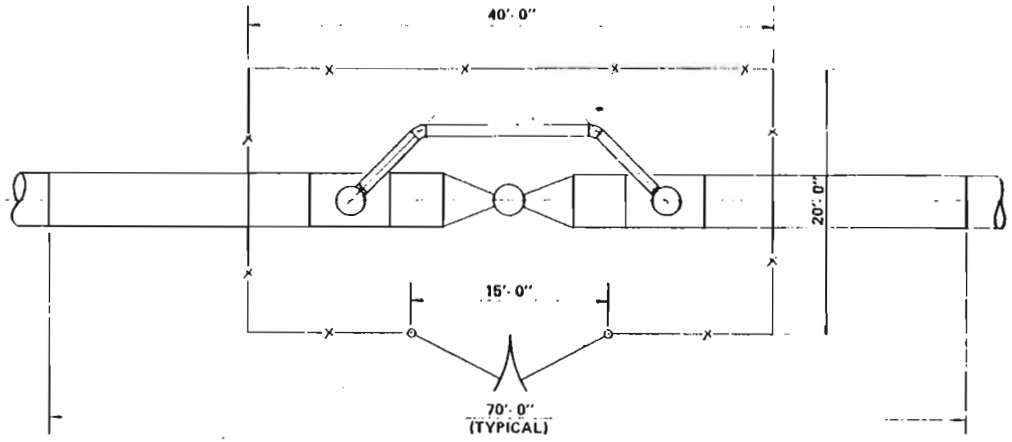

PLAN
N.T.S.

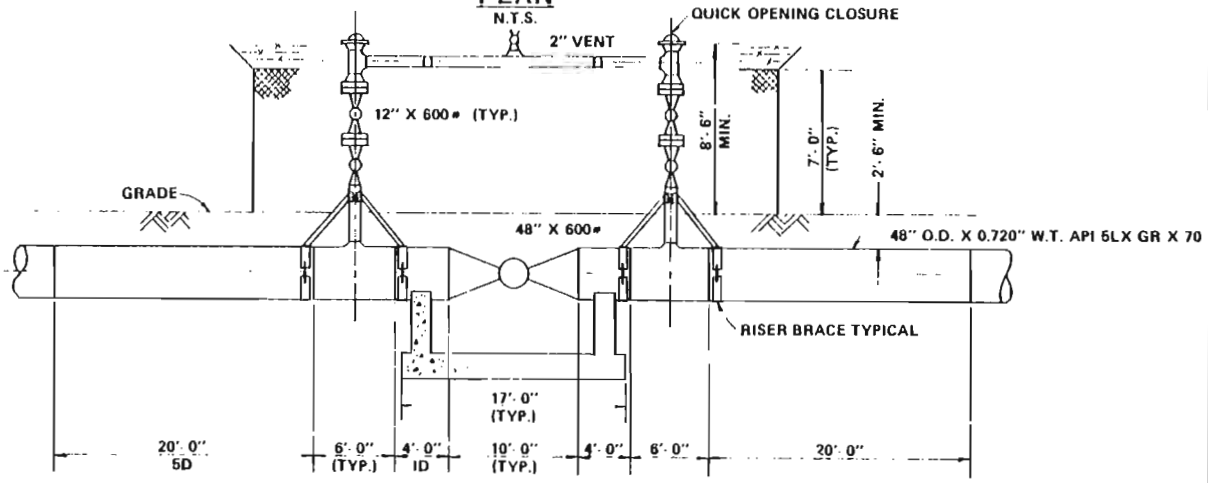

ELEVATION

GENERAL NOTES

1. THIS DRAWING IS APPLICABLE TO THE FOLLOWING MAINLINE VALVE LOCATIONS:

   MLV 1, 2, 3, 5, 6, 7, 9, 10, 11, 13, 14, 16, 17, 18, 19, 21, 22, 23, 24, 25, 27, 28, 29, 30, 32, 33, 34, 35, 36, 38, 39, 40, 41, 42

2. ALL MATERIALS FOR ABOVE GROUND PIPING TO BE SUITABLE FOR TEMPERATURES DOWN TO – 80° F.

3. FOR TYPICAL WELD BEVEL DETAILS SEE DWG. NO. 4680-10-00-9-P-802.

DWG. NO. 4680-10-00-9-P-701

ALASKAN NORTHWEST NATURAL GAS TRANSPORTATION COMPANY

TYPICAL MAINLINE VALVE STATION

ALASKA SEGMENT OF THE ALASKAN NATURAL GAS TRANSPORTATION SYSTEM

FLUOR	J.R. Brandt	DATE 4/30/80	
DEC	4/22/80	FIGURE	5 of 7

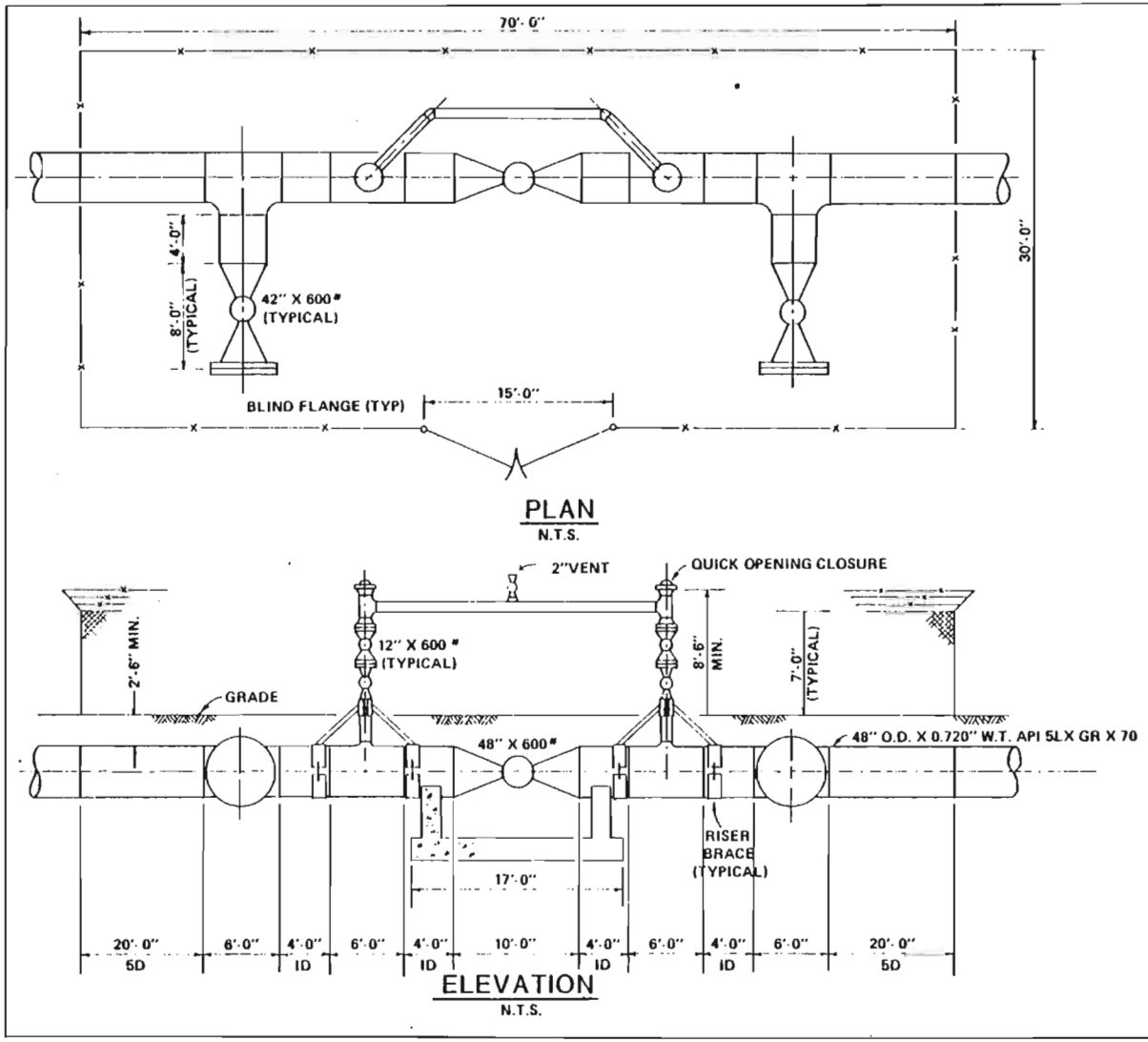

DOCKET NO CP80
EXHIBIT Z-9.0
HEARING EXHIBIT NO

GENERAL NOTES

1. THIS DRAWING IS APPLICABLE TO THE FOLLOWING MAINLINE VALVE LOCATIONS;
   MLV 4, 8, 12, 15, 20, 26, 31, 37, 43
2. ALL MATERIALS FOR ABOVE GROUND PIPING TO BE SUITABLE FOR TEMPERATURES DOWN TO -80°F.
3. FOR TYPICAL WELD BEVEL DETAILS SEE DWG. NO. 4680-10-00-9-P-802.

DWG. NO. 4680-10-00-9-P-703

ALASKAN NORTHWEST NATURAL GAS TRANSPORTATION COMPANY

TYPICAL VALVE STATION
AT FUTURE COMPRESSOR STATIONS

ALASKA SEGMENT OF THE ALASKAN NATURAL GAS TRANSPORTATION SYSTEM

DRAWN	S.R. Brandt	DATE	9/30/80
CHEC		FIGURE	

DOCKET NO. CPHO
EXHIBIT Z-9.0
HEARING EXHIBIT NO.

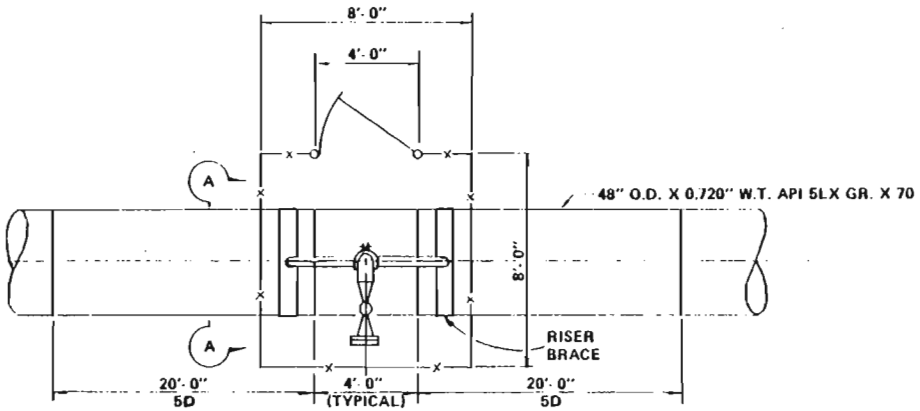

PLAN
N.T.S.

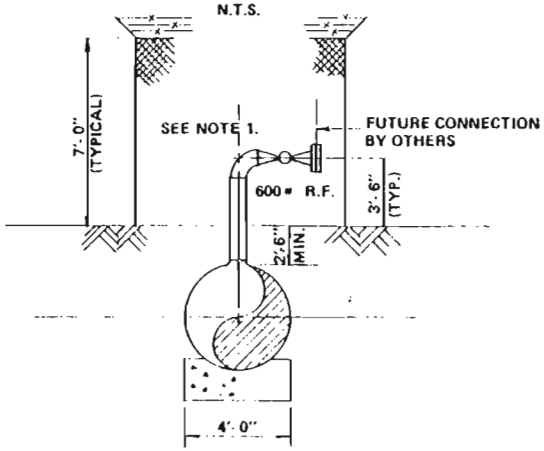

SECTION A-A
N.T.S.

GENERAL NOTES

1. LOCATION AND SIZE OF GAS TAKE-OFF POINTS ARE AS FOLLOWS:

TAKE-OFF LOCATION	APPROXIMATE MILE POST	SIZE OF TAKE-OFF PIPING
FAIRBANKS	464	8"
DELTA JUNCTION	548	6"
DELTA GRAIN DRYER	566	6"
DOT LAKE	607	6"
TOK	656	6"
NORTHWAY	703	6"

2. ALL MATERIALS FOR ABOVE GRADE PIPING TO BE SUITABLE FOR TEMPERATURES DOWN TO -60° F.

3. FOR TYPICAL WELD BEVEL DETAILS SEE DWG. NO. 4680-10-00-9-P-802.

DWG. NO. 4680-10-00-9-P-704

ALASKAN NORTHWEST NATURAL GAS TRANSPORTATION COMPANY

TYPICAL GAS TAKE-OFF ASSEMBLY

ALASKA SEGMENT OF THE ALASKAN NATURAL GAS TRANSPORTATION SYSTEM

DRAWN SR Brandt	DATE 4/30/80	
DES.	ENGR.	5/14

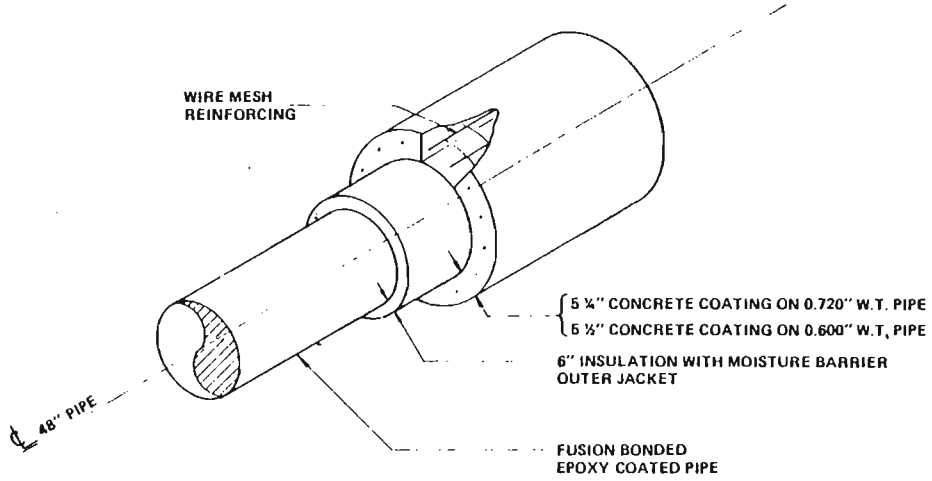

DOCKET NO. CPBO
EXHIBIT Z-9.0
HEARING EXHIBIT NO.

GENERAL NOTES

1. THICKNESS OF CONCRETE COATING BASED ON CONCRETE DENSITY OF 190 PCF.

DWG. NO. 4680-10-00-8-P-801

ALASKAN NORTHWEST NATURAL GAS TRANSPORTATION COMPANY

TYPICAL INSULATED PIPE WITH REINFORCED CONCRETE COATING

ALASKA SEGMENT OF THE ALASKAN NATURAL GAS TRANSPORTATION SYSTEM

FLOOR JRBrandt	DATE 4/30/80	
GIEC [signature] 4/30/80	FIGURE	5/14

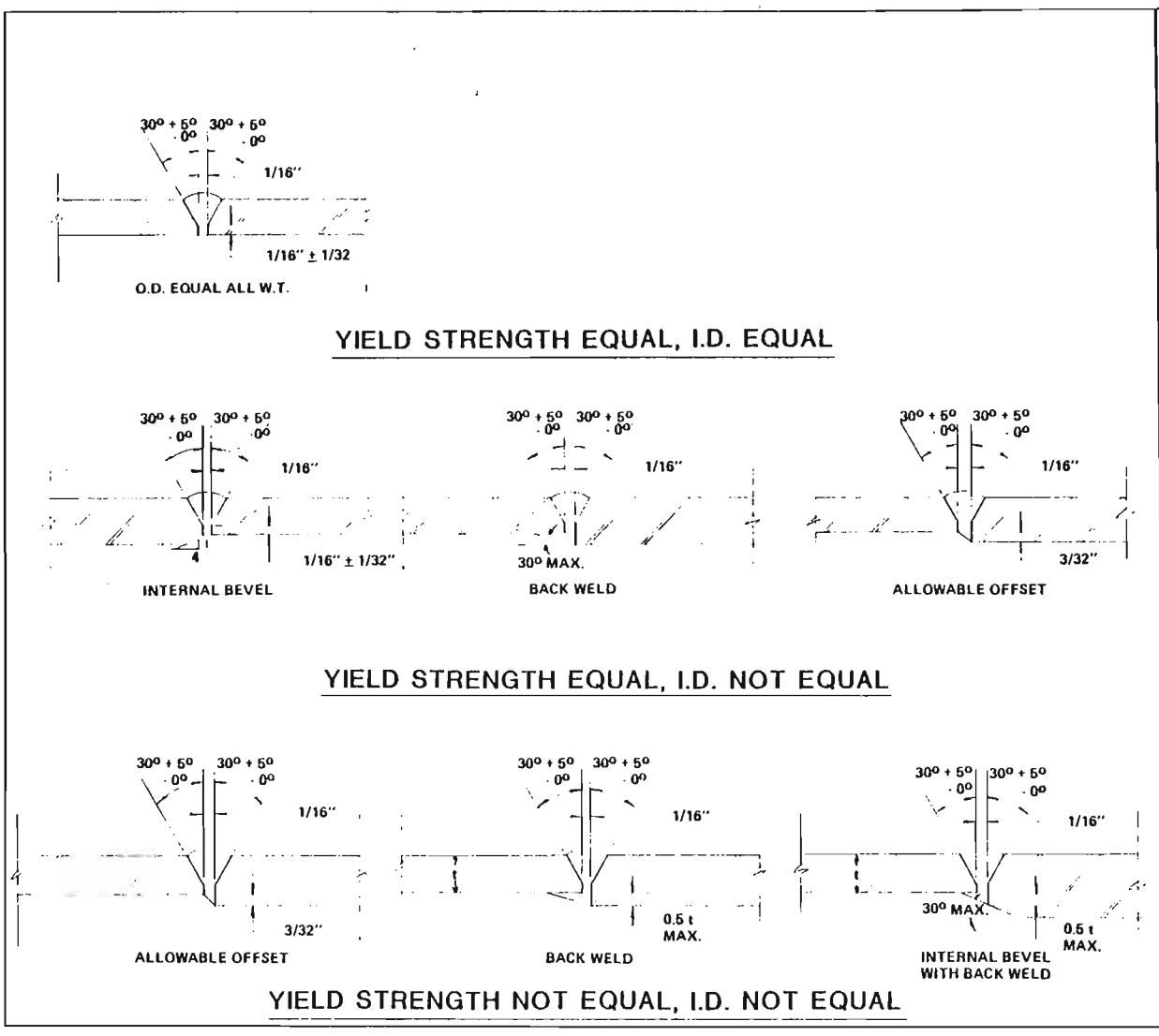

DOCKET NO CP80
EXHIBIT Z-9.0
HEARING EXHIBIT NO

DWG. NO. 4680-10-00-8-P-802

ALASKAN NORTHWEST NATURAL GAS TRANSPORTATION COMPANY

TYPICAL WELD BEVELS

ALASKA SEGMENT OF THE ALASKAN NATURAL GAS TRANSPORTATION SYSTEM

FLOOR J R Brandt	DATE 4/30/80	
GIEC 4/30/80	FIGURE	

DOCKET NO CP80
EXHIBIT Z-9.0
HEARING EXHIBIT NO

RIGHT-OF-WAY LINE MARKER SIGN

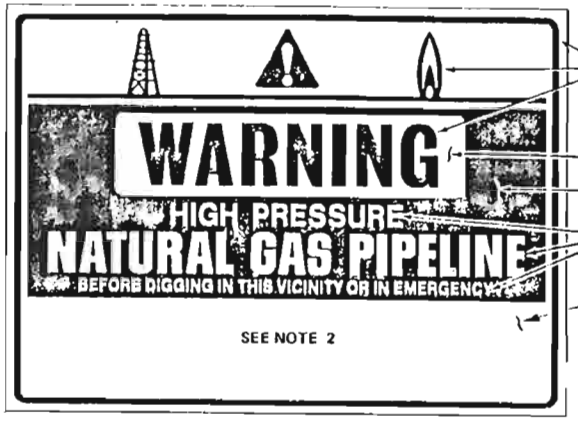

BLACK LETTERS AND DECORATIONS
RED BACKGROUND
BLACK BACKGROUND
YELLOW LETTERS
YELLOW BACKGROUND

NAVIGABLE -WATERWAY LINE MARKER SIGN

INTERNATIONAL ORANGE BORDER
BLACK LETTERING (TYPICAL)
WHITE BACKGROUND

GENERAL NOTES

1. SIGN DIMENSIONS 14 X 20 INCHES.
2. THIS SECTION TO CONTAIN EMERGENCY CONTACT INFORMATION.

DWG. NO. 4680-10-00-9-P-803

ALASKAN NORTHWEST NATURAL GAS TRANSPORTATION COMPANY

TYPICAL MARKER SIGNS

ALASKA SEGMENT OF THE ALASKAN NATURAL GAS TRANSPORTATION SYSTEM

FLOOR J R Brandt	DATE 9/30/80	
CHECK [illegible] 9/30/80	FIGURE	

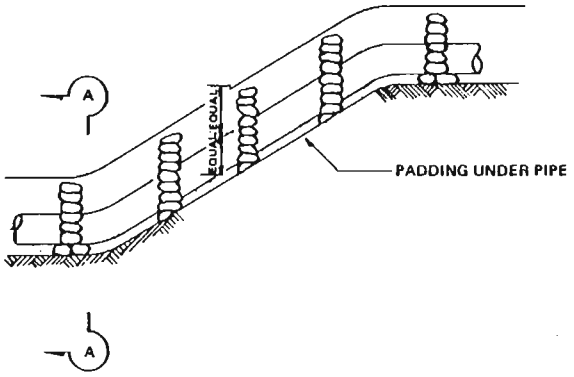

PROFILE

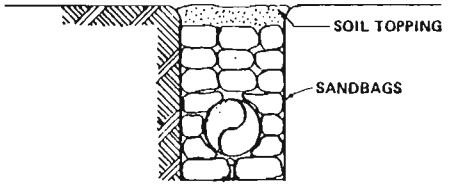

SECTION A-A

DOCKET NO CP80
EXHIBIT Z-9.0
HEARING EXHIBIT NO

GENERAL NOTES

1. SPRAYED POLYURETHANE FOAM TYPE DITCH BREAKERS WILL BE USED IN SUITABLE LOCATIONS.

DWG. NO. 4680-10-00-B-P-804

ALASKAN NORTHWEST NATURAL GAS TRANSPORTATION COMPANY

TYPICAL DITCH BREAKER

ALASKA SEGMENT OF THE ALASKAN NATURAL GAS TRANSPORTATION SYSTEM

FLOOR J.R. Brandt	DATE 4/30/80	
GIEC	FIGURE	5/14

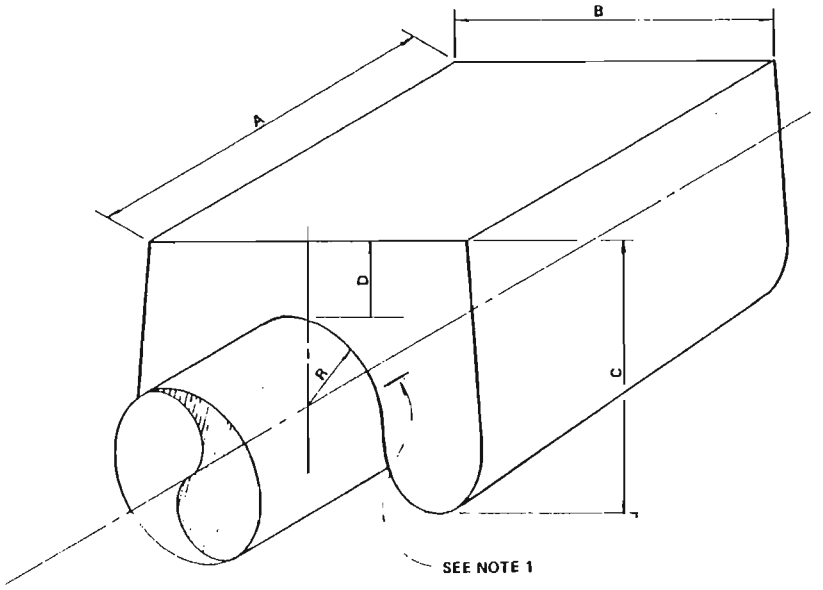

NOMINAL DIMENSIONS					
SIZE (LB.)	A	B	C	D	R
13,500	5'-6"	6'-0"	5'-0"	1'-6"	2'-1"
25,000	8'-0"	7'-0"	6'-0"	1'-6"	2'-7"

DOCKET NO CP80
EXHIBIT Z-9.0
HEARING EXHIBIT NO

GENERAL NOTES

1. FELT PAD, ¾" THICK, TO BE INSTALLED AT TIME OF WEIGHT FORMING TO FULLY PAD ENTIRE WEIGHT TO PIPE CONTACT SURFACE.
2. WEIGH SIZE BASED ON A CONCRETE DENSITY OF 140 PCF.

DWG. NO. 4680-10-00-B-P-805

ALASKAN NORTHWEST NATURAL GAS TRANSPORTATION COMPANY

CONCRETE SET-ON WEIGHT DETAILS

ALASKA SEGMENT OF THE ALASKAN NATURAL GAS TRANSPORTATION SYSTEM

FLUOR JRBrandt	DATE 4/30/80	[illegible]
GETC [illegible] 4/26/80	FIGURE	5/12

DOCKET NO. CP80 _____
EXHIBIT Z-9.0
HEARING EXHIBIT NO. _____

GENERAL NOTES

1. WEIGHT SIZE AND SPACING BASED ON A COMBINED SPECIFIC GRAVITY AND NEGATIVE BUOYANCY OF 1.20.

2. WEIGHT AS FOLLOWS:

   BARE PIPE ..... 13,500# @ 10'-0" c.c.
   6" INSULATED PIPE ..... 25,000# @ 10'-0" c.c.

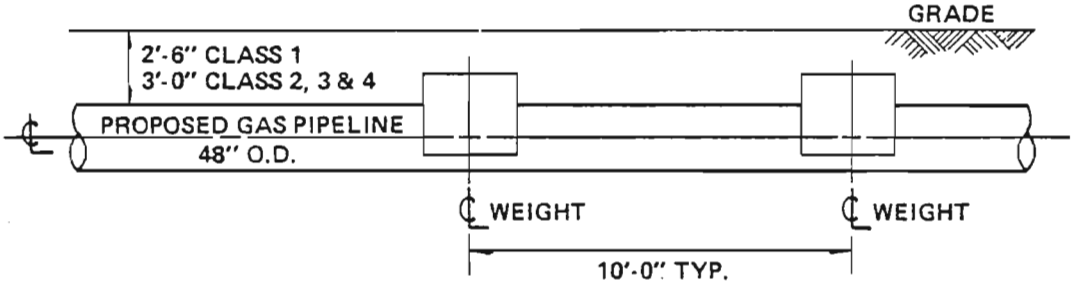

DWG. NO. 4680-10-00-9-P-302

ALASKAN NORTHWEST NATURAL GAS TRANSPORTATION COMPANY

TYPICAL WETLAND CROSSING

ALASKA SEGMENT OF THE ALASKAN NATURAL GAS TRANSPORTATION SYSTEM.

FLUOR JR Brandt	DATE 4/30/80	
GIEC 4/24/80	FIGURE	5/14

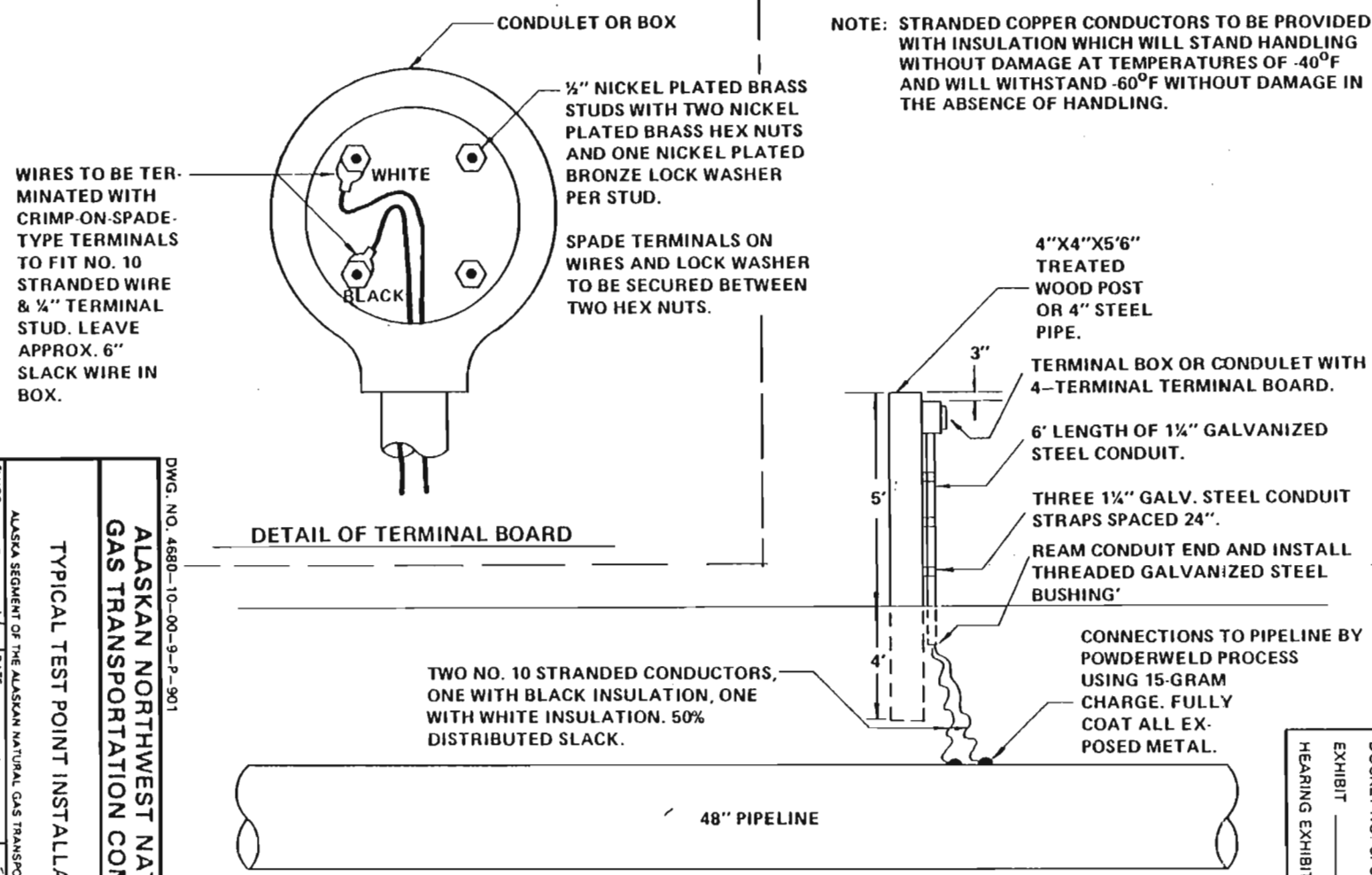

NOTE: STRANDED COPPER CONDUCTORS TO BE PROVIDED WITH INSULATION WHICH WILL STAND HANDLING WITHOUT DAMAGE AT TEMPERATURES OF -40°F AND WILL WITHSTAND -60°F WITHOUT DAMAGE IN THE ABSENCE OF HANDLING.

NOTE: THIS STANDARD TEST POINT INSTALLATION TO BE USED AT APPROXIMATELY 1 MILE INTERVALS ALONG PIPELINE EXCEPT FOR THOSE LOCATIONS WHERE ANOTHER TYPE OF TEST POINT INSTALLATION IS SPECIFIED. TYPICAL ADDITIONAL TYPES WILL BE AS DESIGNED FOR USE AT CASED CROSSINGS, INSULATED FITTINGS, FOREIGN PIPELINE CROSSINGS, WHERE PIPELINE CATHODIC PROTECTION CURRENT MEASUREMENT IS DESIRED, AND AT GALVANIC ANODE LOCATIONS (ON A SAMPLING BASIS).

DOCKET NO. CP80 _____
EXHIBIT Z-9.0
HEARING EXHIBIT NO. _____

DWG. NO. 4680–10–00–9–P–901

ALASKAN NORTHWEST NATURAL GAS TRANSPORTATION COMPANY

TYPICAL TEST POINT INSTALLATION

ALASKA SEGMENT OF THE ALASKAN NATURAL GAS TRANSPORTATION SYSTEM

FLUOR JR Brandt | DATE 4/30/80 | FIGURE 2/14

GIEC 4/24/80

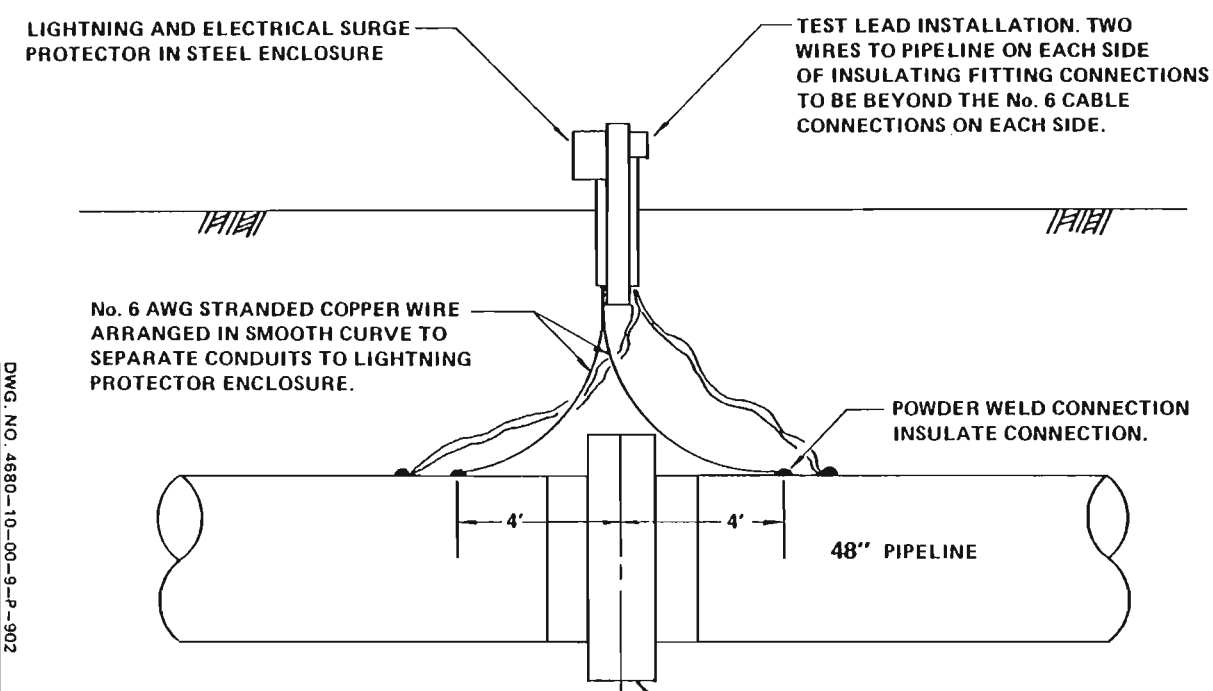

NOTE: WIRE FROM PIPELINE TO LIGHTNING PROTECTOR ENCLOSURE TO BE INSULATED WITH 5000 VOLT LEVEL INSULATION.

INSULATING FITTINGS TO BE USED TO ELECTRICALLY ISOLATE PIPELINES AT CHANGE OF OWNERSHIP AND ON EACH SIDE OF COMPRESSOR STATION SITES.

DOCKET NO. CP80 _____
EXHIBIT Z-9.0
HEARING EXHIBIT NO. _____

DWG. NO. 4680-10-00-9-P-902

ALASKAN NORTHWEST NATURAL GAS TRANSPORTATION COMPANY

TYPICAL INSULATING FITTING FOR ELECTRICALLY ISOLATING PIPELINE

ALASKA SEGMENT OF THE ALASKAN NATURAL GAS TRANSPORTATION SYSTEM

FLUOR JRBrandt | DATE 4/30/80 | FIGURE

CHECK 4/22/80

DOCKET NO. CP80 _____
EXHIBIT Z-9.0
HEARING EXHIBIT NO _____

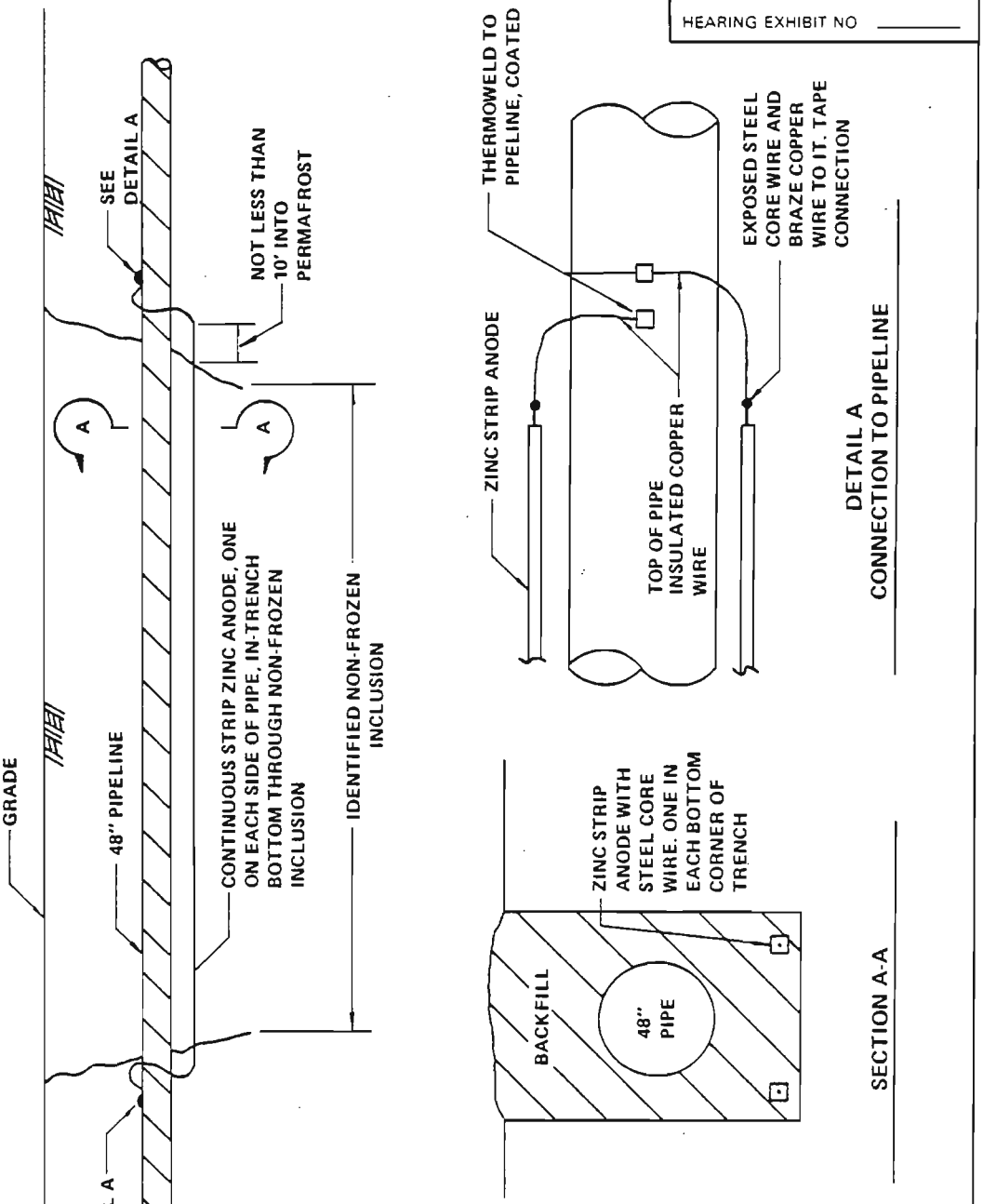

DWG. NO. 4680-10-00-9-P-903

ALASKAN NORTHWEST NATURAL GAS TRANSPORTATION COMPANY		
GALVANIC ANODE INSTALLATIONS AT NON-FROZEN INCLUSIONS ALONG PIPELINE IN PERMAFROST ALASKA SEGMENT OF THE ALASKAN NATURAL GAS TRANSPORTATION SYSTEM		
FLUOR JR Brandt	DATE 4/30/80	
GIEC 4/22/80	FIGURE	5.1.4

DOCKET NO. CP80 _____
EXHIBIT Z-9.0
HEARING EXHIBIT NO. _____

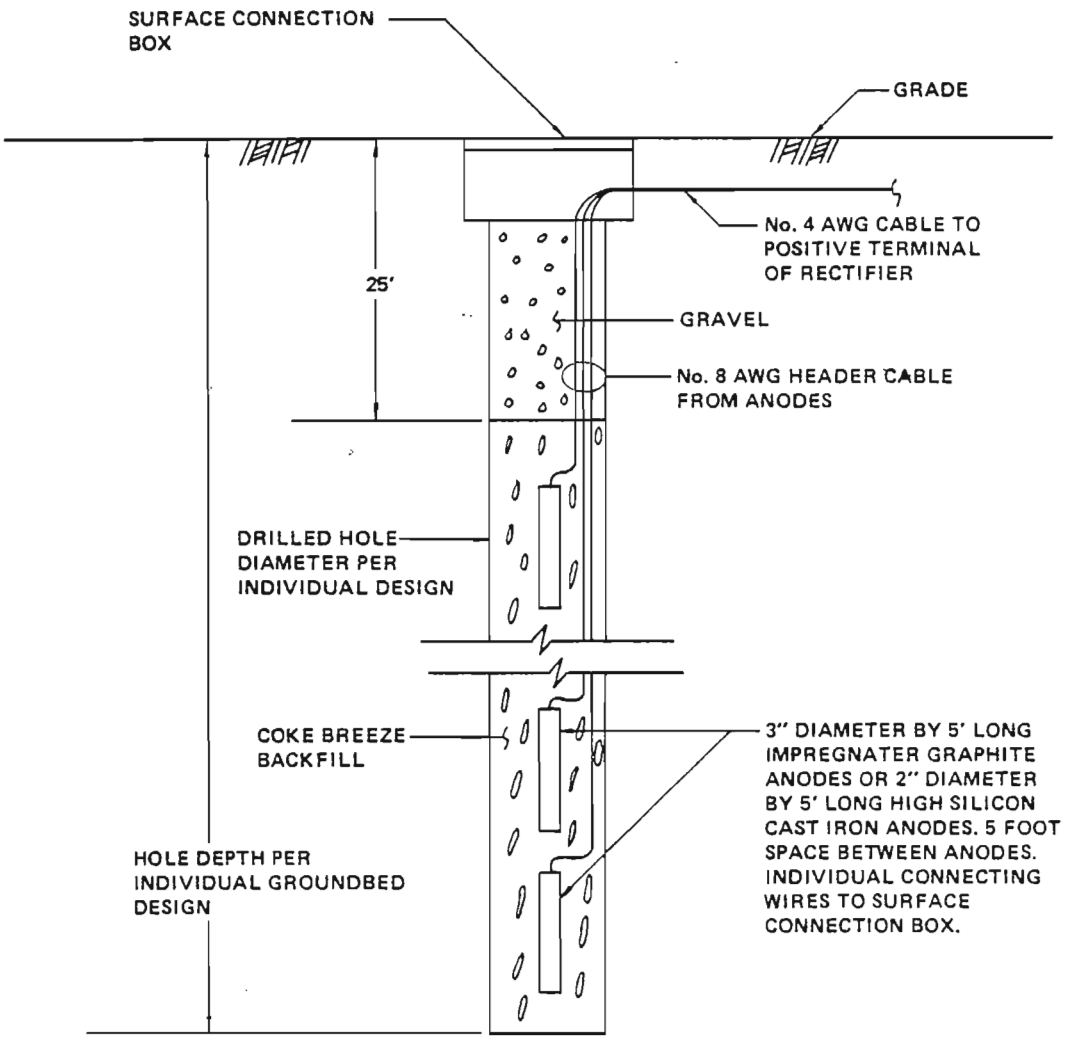

DWG. NO. 4680-10-00-9-P-904

ALASKAN NORTHWEST NATURAL GAS TRANSPORTATION COMPANY

TYPICAL DEEP ANODE GROUNDBED
UNHEATED – FOR USE IN PERMAFROST

ALASKA SEGMENT OF THE ALASKAN NATURAL GAS TRANSPORTATION SYSTEM

FLUOR JR Brandt	DATE 4/30/80	
CIEC 4/22/80	FIGURE	5.1.4

DOCKET NO CP80 _____
EXHIBIT Z-9.0
HEARING EXHIBIT NO _____

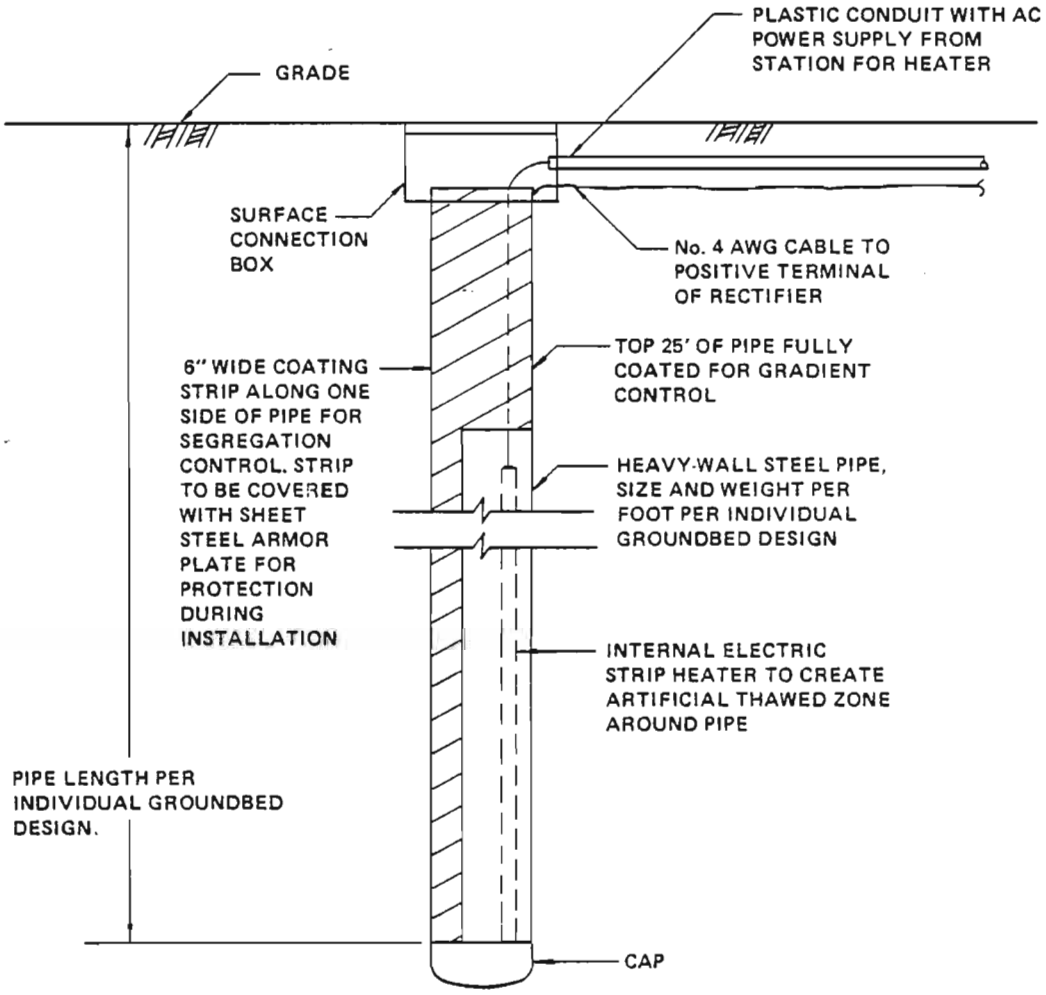

DWG. NO. 4680-10-00-9-P-905

ALASKAN NORTHWEST NATURAL GAS TRANSPORTATION COMPANY	
TYPICAL DEEP ANODE GROUNDBED WITH INTERNAL HEAT FOR USE IN PERMAFROST ALASKA SEGMENT OF THE ALASKAN NATURAL GAS TRANSPORTATION SYSTEM	
FLUOR SR Brandt DATE 4/30/80	
GIEC 4/22/80 FIGURE	5.4

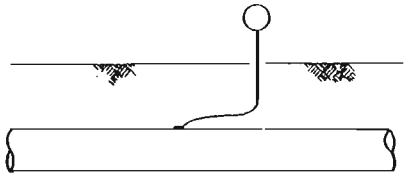

STANDARD – 1 WIRE

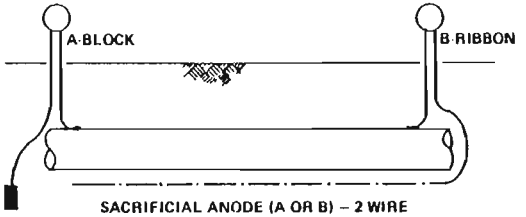

SACRIFICIAL ANODE (A OR B) – 2 WIRE

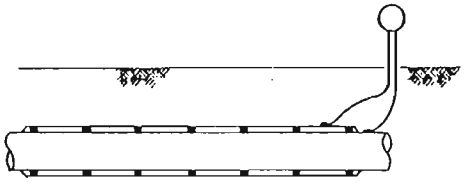

CASED ROAD CROSSING – 2 WIRE

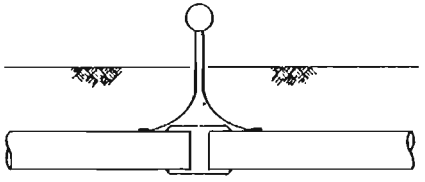

INSULATED JOINT – 2 WIRE

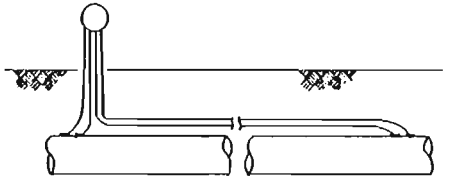

1 R DROP – 4 WIRE

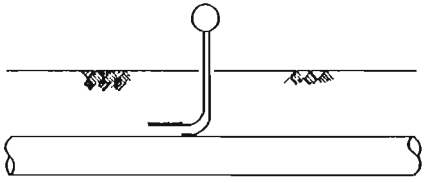

REFERENCE CELL – 2 WIRE

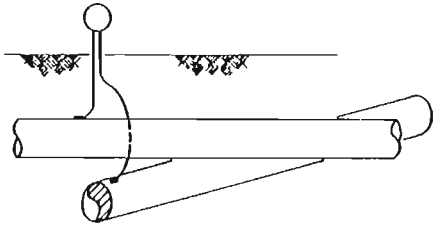

FOREIGN LINE CROSSING – 2 WIRE

E-42

DOCKET NO CPBO
EXHIBIT Z-9.0
HEARING EXHIBIT NO

DWG. NO. 4680-10-00-9-P-906

ALASKAN NORTHWEST NATURAL GAS TRANSPORTATION COMPANY

STANDARD TEST STATIONS

ALASKA SEGMENT OF THE ALASKAN NATURAL GAS TRANSPORTATION SYSTEM

FLUOR	JRB	DATE 4/30/80	
GIEC		FIGURE	5.1.1

Docket No. CP80-
Exhibit Z-9.0
Hearing Exhibit No.

TABLE E-1

MAINLINE VALVE LOCATIONS

Mainline Valve Number	Alignment Sheet	Milepost	Facility	Distance Between Valves (MI.)
1	001	0.00	Meter Station	
				17.93
2	004	17.93		
				12.79
3	006	30.15		
				14.33
4	008	44.48	Compressor Sta. No. 1 (Future)	16.80
5	011	61.28		
				18.62
6	014	79.98	Compressor Sta. No. 2	15.98
7	017	95.88		
				17.83
8	020	113.72	Compressor Sta. No. 3 (Future)	11.99
9	022	125.30		
				15.95
10	025	141.25	Compressor Sta. No. 4.	20.46
11	029	161.07		
				19.75
12	032	180.82	Compressor Sta. No. 5 (Future)	18.67
13	035	199.00		
				19.12
14	039	218.00		
				16.43
15	041	234.48	Compressor Sta. No. 6 (Future)	20.00
16	045	255.06		
				19.06
17	048	273.83	Compressor Sta. No. 7	15.64
18	051	289.47		
				14.92
19	053	304.65		
				15.73
20	056	320.70	Compressor Sta. No. 8 (Future)	19.34

TABLE E-1 (Continued)

Mainline Valve Number	Alignment Sheet	Milepost	Distance Between Facility	Valves (MI.)
21	060	340.04		
				20.19
22	064	360.23		
				19.97
23	067	380.82	Compressor Sta. No. 9	
				19.37
24	071	400.32		
				14.40
25	073	414.30		
				17.78
26	076	431.90	Compressor Sta. No. 10 (Future)	
				20.40
27	080	452.59		
				20.75
28	084	473.34		
				19.99
29	087	494.08	Compressor Sta. No. 11	
				20.58
30	091	514.67		
				20.07
31	095	534.65	Compressor Sta. No. 12 (Future)	
				17.38
32	098	551.28		
				12.38
33	100	563.66		
				15.89
34	103	579.55	Compressor Sta. No. 13	
				17.73
35	106	597.28		
				18.81
36	109	616.09		
				18.11
37	112	534.20	Compressor Sta. No. 14 (Future)	
				19.16
38	116	653.36		
				14.23
39	118	667.59		
				17.35
40	121	684.94	Compressor Sta. No. 15	
				15.32
41	124	700.14		
				15.60
42	127	715.74		
				15.22

TABLE E-1 (Continued)

Mainline Valve Number	Alignment Sheet	Milepost	Distance Between Facility	Valves (MI.)
43	129	730.96	Compressor Sta. No. 16 (Future)	12.13
44	131	743.17	Meter Station No. 2	

Distance between valves includes all equations.

Docket No. CP80-
Exhibit Z-9.0
Hearing Exhibit No.

TABLE E-2

MAJOR STREAM CROSSINGS REQUIRING
SPECIAL CONSTRUCTION CONSIDERATIONS

	Name	Milepost	Crossing Length (Feet)	Wall Thickness (Inches)	Depth of Cover (Feet)
1.	Atigun	148.42	550'	0.720	8'
2.	Dietrich	211.91	1100'	0.720	9'
3.	Mid. Fk. Koyukuk	214.49	1800'	0.720	11'
4.	Mid. Fk. Koyukuk/ Hammond (1)	228.86	2700'	0.720	(1)
5.	Mid. Fk. Koyukuk	230.90	1000'	0.720	11'
6.	So. Fk. Koyukuk	264.00	1200'	0.720	12'-6"
7.	Jim	275.20	400'	0.720	14'
8.	Yukon (1)	361.50	2300'	0.720	(1)
9.	Hess Creek	386.76	600'	0.720	9'
10.	Tolovana	406.98	420'	0.720	6'-10"
11.	Chatanika	446.34	450'	0.720	11'-7"
12.	Little Chena	468.88	300'	0.600	7'-6"
13.	Chena	475.31	500'	0.720	11'
14.	Salcha	503.42	1200'	0.720	15'
15.	Tanana (1)	539.32	1152'	0.720	(1)
16.	Gerstle	576.55	2320'	0.720	4'
17.	Johnson	588.73	960'	0.720	7'
18.	Robertson	621.35	1600'	0.720	5'-3"
19.	Tok	659.89	440'	0.600	9'-3"
20.	Tanana (1)	666.05	1000'	0.720	(1)
21.	Gardiner Creek	718.54	150'	0.600	11'-9"
22.	Scottie Creek	739.38	200'	0.720	7'

NOTE: (1) Aerial Crossing

Docket No. CP80-
Exhibit Z-9.0
Hearing Exhibit No.

TABLE E-3

ROAD CROSSINGS

NAME	ALIGNMENT SHEET	MILE POST	REMARKS
Road	001	4.51	Uncased
Prudhoe Bay Road	008	43.85	Cased 56"
Prudhoe Bay Road	008	45.23	Cased 56"
Prudhoe Bay Road	011	61.87	Cased 56"
Road	011	63.15	Uncased
Prudhoe Bay Road	012	66.95	Cased 56"
Prudhoe Bay Road	013	70.25	Cased 56"
Prudhoe Bay Road	014	79.71	Cased 56"
Prudhoe Bay Road	014	80.69	Cased 56"
Road	016	87.82	Uncased
Prudhoe Bay Road	018	98.51	Cased 56"
Prudhoe Bay Road	024	131.96	Cased 56"
Prudhoe Bay Road	025	140.89	Cased 56"
Prudhoe Bay Road	025	141.81	Cased 56"
Prudhoe Bay Road	027	150.83	Cased 56"
Prudhoe Bay Road	030	165.82	Cased 66"
Prudhoe Bay Road	031	171.70	Cased 66"
Road	031	172.05	Cased 56"
Prudhoe Bay Road	032	181.93	Cased 66"
Road	037	209.79	Uncased
Prudhoe Bay Road	039	221.64	Cased 56"
Prudhoe Bay Road	039	221.97	Cased 56"
Prudhoe Bay Road	040	223.60	Cased 56"
Prudhoe Bay Road	040	223.89	Cased 56"
Prudhoe Bay Road	044	247.07	Cased 56"
Prudhoe Bay Road	044	250.63	Cased 56"

TABLE E-3 (Continued)

ROAD CROSSINGS

NAME	ALIGNMENT SHEET	MILE POST	REMARKS
Prudhoe Bay Road	033	185.39	Cased 66"
Prudhoe Bay Road	035	196.54	Cased 66"
Prudhoe Bay Road	037	205.57	Cased 66"
Prudhoe Bay Road	038	211.51	Cased 56"
Prudhoe Bay Road	038	214.15	Cased 66"
Prudhoe Bay Road	042	236.48	Cased 56"
Prudhoe Bay Road	044	247.07	Cased 56"
Prudhoe Bay Road	044	250.63	Cased 56"
Prudhoe Bay Road	044	251.67	Cased 56"
Prudhoe Bay Road	045	254.10	Cased 66"
Prudhoe Bay Road	046	263.38	Cased 56"
Prudhoe Bay Road	047	264.75	Cased 66"
Prudhoe Bay Road	048	270.26	Cased 56"
Prudhoe Bay Road	054	308.58	Cased 56"
Prudhoe Bay Road	054	309.77	Cased 66"
Prudhoe Bay Road	056	319.39	Cased 56"
Prudhoe Bay Road	062	349.89	Cased 56"
Prudhoe Bay Road	062	351.43	Cased 56"
Prudhoe Bay Road	063	355.07	Cased 56"
Prudhoe Bay Road	063	356.09	Cased 56"
Prudhoe Bay Road	064	362.31	Cased 56"
Prudhoe Bay Road	064	363.91	Cased 56"
Prudhoe Bay Road	067	375.98	Cased 56"
Prudhoe Bay Road	067	376.90	Cased 56"
Prudhoe Bay Road	067	378.55	Cased 66"
Prudhoe Bay Road	067	381.24	Cased 56"
Prudhoe Bay Road	068	385.76	Cased 56"
Prudhoe Bay Road	071	403.12	Cased 66"
Prudhoe Bay Road	071	405.62	Cased 66"

TABLE E-3 (Continued)

ROAD CROSSING

NAME	ALIGHMENT SHEET	MILE POST	REMARKS
Elliott Highway	074	420.71	Cased 66"
Elliott Highway	074	421.79	Cased 66"
Road	074	422.42	Uncased
Murphy Dome Road	080	453.05	Uncased
Elliott Highway	080	454.36	Cased 56"
Steese Highway	081	457.25	Cased 66"
Road	081	458.25	Uncased
Chena Hot Springs Road	083	469.10	Cased 66"
Road	085	480.40	Uncased
Road	086	486.29	Uncased
Road	088	496.70	Uncased
Road	093	527.54	Uncased
Road	095	533.07	Uncased
Quartz Lake Road	095	536.39	Uncased
Tanana Loop Road	096	540.12	Uncased
Road	097	545.88	Uncased
Triple H Road	098	551.34	Uncased
Clear Water (Remington Road)	098	554.55	Uncased
Alaska Highway	104	583.33	Cased 56"
Alaska Highway	108	608.96	Cased 56"
Alaska Highway	110	619.61	Cased 56"
Alaska Highway	114	641.37	Cased 66"
Tanacross Village Road	114	643.23	Uncased
Tanacross Airport Road	114	644.29	Uncased

TABLE E-3 (Continued)

ROAD CROSSINGS

NAME	ALIGNMENT SHEET	MILE POST	REMARKS
Dirt Road	116	656.15	Uncased
Dirt Road	117	660.95	Uncased
Taylor Highway	118	667.63	Cased 56"
Alaska Highway	121	682.60	Cased 56"
Alaska Highway	121	684.69	Cased 56"
Alaska Highway	126	710.85	Cased 56"
Road	127	715.70	Uncased
Alaska Highway	129	729.71	Cased 66"
Alaska Highway	131	740.35	Cased 56"

All road crossings listed will be 48" OD x 0.720" WT pipe.

Uncased Road Crossings	20
56" Cased Road Crossings	55
66" Cased Road Crossings	17
Total Number of Road Crossings	92

Docket No. CP80-
Exhibit Z-9.0
Hearing Exhibit No.

TABLE E-4

LOCATION OF FOREIGN PIPELINE CROSSINGS

NAME	PIPELINE MODE (ABOVE OR BELOWGROUND)	ALIGNMENT SHEET	MILE POST
Gathering Pipeline	ABOVE	001	5.37
TAPS and Fuel Gas	BELOW	005	24.26
Fuel Gas	BELOW	008	43.84
Fuel Gas	BELOW	008	45.24
Fuel Gas	BELOW	012	63.56
Fuel Gas	BELOW	012	66.94
Fuel Gas	BELOW	013	70.24
Fuel Gas	BELOW	014	79.70
Fuel Gas	BELOW	014	80.70
Utility Corridor	BELOW	016	88.04
Fuel Gas	BELOW	016	91.72
*TAPS and Fuel Gas	ABOVE	017	96.02
*TAPS and Fuel Gas	ABOVE	019	108.29
TAPS	BELOW	021	115.10
Fuel Gas	BELOW	021	115.20
Fuel Gas	BELOW	021	118.55
TAPS	ABOVE	024	132.06
Fuel Gas	BELOW	024	132.44
*TAPS and Fuel Gas	ABOVE	027	148.01
TAPS	BELOW	031	172.06
TAPS	ABOVE	033	185.29
TAPS	ABOVE	038	211.57
TAPS	ABOVE	038	214.08
TAPS	ABOVE	045	245.02
TAPS	ABOVE	046	261.40
TAPS	BELOW	056	319.33

TABLE E-4 (Continued)

LOCATION OF OTHER PIPELINE CROSSINGS

NAME	PIPELINE MODE (ABOVE OR BELOWGROUND)	ALIGNMENT SHEET	MILE POST
TAPS	BELOW	061	348.42
TAPS	ABOVE	063	356.08
TAPS	ABOVE	064	362.44
TAPS	BELOW	066	374.68
TAPS	BELOW	073	414.24
TAPS	BELOW	086	485.96
TAPS	ABOVE	094	528.25

*Fuel Gas Pipeline will always be in a below ground mode.

Number of crossings:

TAPS - 20 (12 ABOVE, 8 BELOW)

Fuel Gas - 15

Others - 2