SUSITNA HYDROELECTRIC PROJECT

PLANNING MEMORANDUM
SUBTASK 8.02
PRELIMINARY TRANSMISSION
SYSTEM ANALYSIS

PREFACE

This Planning Memorandum is an interim report to describe the preliminary analyses carried out under Subtask 8.02, "Electric System Studies". In view of the uncertainty of a number of system parameters, some sweeping assumptions had to be made to be able to carry out this preliminary analysis.

One important item which is still undecided at the time of this writing is the interconnection configuration of the Susitna transmission with the utilities in the Anchorage area. The technical analyses, including transmission line energizing, load flow and transient stability studies, were performed assuming two major switching and transformer stations in Anchorage, without knowledge of their locations, as shown in the system diagrams in Figures 3.1 and 3.2. Due to later information, it was proposed to base the economic comparison of the various transmission alternatives on a single switching station at the western terminal of a 230-kV cable crossing of Knik Arm. The costs of the cable crossing, being common to all alternatives, were excluded from the comparison.

The final common configuration will have to be determined, as will a number of other parameters, before the technical and economic analyses can be completed. The capital and operating costs of all components of the Susitna transmission system will then have to be included in the economic comparison of alternatives. It is expected that the conclusions drawn from this study will not be significantly affected by the resulting changes in system parameters.

TABLE OF CONTENTS

LIST OF TABLES

LIST OF FIGURES

1 - INTRODUCTION

The Plan of Study (POS) for the Susitna hydroelectric project, which is currently being undertaken for the Alaska Power Authority (APA) by Acres American Incorporated includes studies of the required transmission system under Task 8.

Subtask 8.02 of Task 8 is entitled Electric System Studies. The objective of this subtask, as defined in the February 1980 POS is as follows.

"To ensure that the electrical aspects of the project design are integrated with the existing Railbelt area power systems and to design an electrical power system which is reliable and economic."

The transmission system for the Susitna project, as currently envisaged, will ultimately involve lines from the Watana and Devil Canyon sites to both Fairbanks and Anchorage. The system is to be designed in such a way that the proposed intertie between Anchorage and Fairbanks, which is presently under study for APA by Commonwealth Associates, will eventually become part of the Susitna transmission system.

Work on Subtask 8.02 commenced in June 1980 and is scheduled to be complete by March 1982. The purpose of this Planning Memorandum is to present the results of the preliminary analysis completed under Subtask 8.02 through June 15, 1981.

2 - SUMMARY

The studies are best summarized by outlining the scope of the work to be performed.

The scope of work includes

- develop transmission system planning criteria
- assemble all data describing existing Railbelt power systems
- study the present and projected load distribution to Anchorage and Fairbanks
- determine delivery points for Susitna power into local utility systems
- determine line loadings for the Susitna transmission system - propose alternative preliminary system configurations
- prepare preliminary cost estimates for alternative system configurations
- perform preliminary screening of various alternatives
- recommend transmission system configuration, voltage and conductor sizes.

Based on the results obtained from the above activities a transmission alternative is recommended which best satisfies the technical planning criteria at an economical cost. The recommended option, called Alternative 2 in this study, has the following major characteristics.

Transmission Line Section	Length (mi)	Number of Circuts	Voltage (kV)	Conductor Size (kcmil)
Watana - Devil Canyon	27	2	345	2 x 954
Devil Canyon - Willow	90	3	345	2 x 954
Willow - Anchorage	50	3	345	2 x 954
Devil Canyon - Fairbanks	189	2	345	2 x 795

3 - DESCRIPTION AND RESULTS OF STUDIES

3.1 - Planning Criteria

The planning criteria were developed to ensure the design of a reliable and economic electrical power system, with components which are rated to allow a smooth transition through early project stages to the ultimately fully developed potential.

System planning criteria were submitted to APA in August 1980 and subsequently accepted without comment. As a result of the better understanding of the Susitna transmission system, gained from the preliminary analyses carried out to date, revised criteria were proposed as outlined in Appendix A. In the revision, some of the criteria were modified to allow for larger variations in performance parameters during early stages of project development. Strict application of optimum, long-term criteria would require the installation of equipment with ratings larger than necessary and at excessive cost. In the interest of economy and long-term system performance, these criteria were temporarily relaxed during early development stages of the project.

While allowing for satisfactory operation during early system development, final system parameters must be based on the ultimate Susitna potential.

The criteria are based on the desirability to maintain rated power flow to Anchorage and Fairbanks during the outage of any single line or transformer element. The essential features of the criteria are

- total power output of Susitna to be delivered to one or two stations at Anchorage and one at Fairbanks

- "breaker-and-a-half" switching station arrangements

- dynamic overvoltages during line energizing not to exceed specified limits

- system voltages to be within established limits during normal operation

- power delivered to the loads to be maintained and system voltages to be kept within established limits for system operation under emergency conditions

- transient stability during a 3-phase line fault cleared by breaker action with no reclosing

- where performance limits are exceeded, the most cost effective corrective measures are to be taken.

3.2 - Existing System Data

The data on the existing power systems in the Railbelt area were assembled by R. W. Retherford Associates. These data have been compiled in a draft report by Commonwealth Associates Inc., dated November 1980 and entitled "Anchorage-Fairbanks Transmission Intertie - Transmission System Data". This report is included, with minor revisions, as Appendix B. Other system data were obtained in the form of single-line diagrams from the various utilities.

3.3 - System Load Forecast

3.3.1 - Load Levels

Energy and peak demand forecasts were prepared for the Alaska Railbelt region by the Institute for Social and Economic Research, University of Alaska (ISER). These were modified to account for

self-supplied industrial and military generation as well as expected results of load management and conservation efforts. The resulting low, medium and high forecasts of peak and energy demand, as shown in Table 3.1, were used in the generation planning analyses of Subtask 6.36.

3.3.2 - Load Distribution

At present, the total Railbelt system load is shared approximately 80 percent by Anchorage and 20 percent by Fairbanks. While the projections of various load forecasts vary somewhat around these figures, the predicted changes are small. To account for the uncertainty in future development, the transmission system was designed to allow for this load sharing to vary from a maximum of 85 percent of Susitna generating capacity at Anchorage to a maximum of 25 percent at Fairbanks.

3.3.3 - Load Power Factors

Loads were represented in the electric system studies at the highest subtransmission level at each load center transformer station, generally 138 kV. Subtransmission at 138 kV from the point of delivery of Susitna power was considered to be the responsibility of individual utilities. As such it was not included in the system simulation. Load power factors were assumed to be corrected to 0.95. Conditions of low voltages were corrected with the help of additional static var generation at the EHV/138-kV transformer station. During detail design stages, it may prove advantageous to carry out most of this power factor correction at lower voltages in the distribution network. This method is expected to be more cost effective in equipment costs and result in operational advantages as well.

3.4 - System Configuration - AC Alternatives

Alternative configurations for the proposed transmission system were developed after reviewing the existing system configurations at both Anchorage and Fairbanks as well as the possibilities and development plans in the Susitna, Anchorage, Fairbanks, Willow and Healy areas.

3.4.1 - Susitna Configuration

Preliminary development plans indicate that the first project to be constructed would be Watana with an initial installed capacity of 400 MW to be increased to approximately 800 MW in the second development stage. The next project, and the last to be considered in this study, is Devil Canyon with an installed capacity of 400 MW to 600 MW.

Devil Canyon and Gold Creek were considered as the sites for a major switching station to collect all of the Susitna generation for transmission to Anchorage and Fairbanks. Switching at Gold Creek would involve the construction and operating cost of one additional station. It would require a larger number of circuit breakers but would reduce the number of transmission circuits in the canyon. Uncertainty about detail line routing and access requirements make a switching station at Gold Creek less desirable. A cost comparison between the two alternative configurations proved that a switching station at Devil Canyon is more economical than at Gold Creek. In the light of all these factors, it is considered advantageous to base present studies on a switching station located at Devil Canyon with transmission directly from there to Anchorage and Fairbanks.

3.4.2 - Switching at Willow

Transmission from Susitna to Anchorage is facilitated by the introduction of an intermediate switching station. This has the effect of reducing line energizing overvoltages and reducing the impact of line outages on system stability. Willow is a suitable location for this intermediate switching station and in addition it would make it possible to supply local load when this is justified by development in the area. This local load is expected to be less than 10 percent of the total Railbelt area system load, but the availability of an EHV line tap would definitely facilitate future power supply.

3.4.3 - Switching at Healy

A switching station at Healy was considered early in the analysis, but was found not to be necessary to satisfy the planning criteria. The predicted load at Healy is small enough to be supplied by the local generation and the existing 138-kV transmission from Fairbanks.

3.4.4 - Anchorage Configuration

In its 1975 report on the Upper Susitna River Hydroelectric Studies, the United States Department of the Interior Corps of Engineers favored a transmission route terminating at Point MacKenzie.

The 1979 Economic Feasibility Study Report for the Anchorage-Fairbanks Intertie by International Engineering Company Inc. (IECo) recommends one circuit from Susitna terminating at Point MacKenzie and another passing through Palmer and Eklutna substations to Anchorage along the eastern side of Knik Arm.

At the beginning of the studies, it was assumed that Susitna power would be delivered to Anchorage through two major transformer stations. Initially, it was thought that one of these might be near Palmer and the other "elsewhere" without detailed knowledge of its location.

Analysis of system configuration, distribution of loads and development in the Anchorage area reveals that a transformer station near Palmer would be of little benefit. Most of the major loads are concentrated in and around the urban Anchorage area at the mouth of Knik Arm. In order to reduce the length of subtransmission feeders, the transformer stations should be located as close to Anchorage as possible.

The routing of transmission into Anchorage may be chosen from three possible alternatives.

(a) Submarine cable crossing from Point MacKenzie to Point Woronzof. This would require transmission through a very heavily developed area. It would also expose the cables to damage by ship's anchors, as has been experienced with existing cables, thus resulting in questionable transmission reliability.

(b) Overland route north of Knik Arm via Palmer. This is likely most economical in terms of capital cost in spite of the long distance involved. However, approval for this route is unlikely since overhead transmission through this developed area is considered environmentally unacceptable. A longer overland route around the developed area is considered unacceptable because of the mountainous terrain.

(c) Submarine cable crossing of Knik Arm, in the area of Lake Lorraine and Six Mile Creek, approximately parallel to the new 230-kV cable under construction for Chugach Electric

Association (CEA). This option, including some 3 to 4 miles of submarine cable, requires a high capital cost. Being upstream from the shipping lanes to the port of Anchorage it would result in a reliable transmission link, and one that would not have to cross environmentally sensitive conservation areas.

The load flow and stability studies were carried out assuming two major switching and transformer stations, without knowledge of their locations, as shown in the system diagrams in Figures 3.1 and 3.2. Later information from the field indicated that Susitna power would likely be delivered to a single 345/230-kV station at the western terminal of the cable crossing outlined in option (c) above. The cost of the cable crossing (at 230 kV) would be common to all transmission alternatives under this option. This cost was thus excluded from the economic analysis comparing the five alternatives in this planning memorandum. The final analysis will benefit from more definitive knowledge regarding the most likely transmission routing and locations of Anchorage transformer stations. The costs of cable crossings and terminal stations for the EHV system will then be included in the final economic comparisons between the various transmission alternatives.

3.4.5 - Fairbanks Configuration

Susitna power for the Fairbanks area is recommended to be delivered to a single EHV/138-kV transformer station located at Ester.

3.5 - Alternating Current Alternatives Analyzed

Because of the geographic location of the various centers, transmission from Susitna to Anchorage and Fairbanks will result in a radial system configuration. This fact allows significant freedom in the choice of

transmission voltages, conductors, and other parameters for the two line sections with only limited dependence between them. In the end, the advantages of standardization for the entire system will have to be compared to the benefits of optimizing each section on its own merits. Transmission alternatives were developed for each of the two system areas including voltage levels, number of circuits required, and other parameters, to satisfy the necessary transmission requirements of each area.

Having established the peak power to be delivered and the distances over which it is to be transmitted, transmission voltages and number of circuits required were determined. To maintain a consistency with standard ANSI voltages used in other parts of the USA, the following voltages were considered for Susitna transmission.

- Watana to Devil Canyon or Gold Creek and on to Anchorage	500 kV or 345 kV
- Devil Canyon or Gold Creek to Fairbanks	345 kV or 230 kV

3.5.1 - Susitna to Anchorage Transmission Alternatives

Transmission at either of two different voltage levels could reasonably provide the necessary power transfer capability over the distance of approximately 140 miles between Devil Canyon and Anchorage. These are 345 kV and 500 kV. The required transfer capability is 85 percent of the ultimate generating capacity of 1,400 MW (1,190 MW). At 500 kV, two circuits would provide more than adequate capability. At 345 kV either three circuits uncompensated, or two circuits with series compensation are required to provide the necessary reliability for the single contingency outage criterion. At lower voltages, an excessive

number of parallel circuits would be required while above 500 kV two circuits are still needed to provide service in the event of a line outage.

3.5.2 - Susitna to Fairbanks Transmission Alternatives

Using the same reasoning as for the choice of transmission alternatives to Anchorage, two circuits of either 230 kV or 345 kV were chosen for the section from Devil Canyon to Fairbanks. The 230-kV alternative requires series compensation to satisfy the planning criteria in case of a line outage.

3.5.3 - Total System Alternatives

The above-mentioned transmission section alternatives were combined into five realistic total system alternatives. Three of the five alternatives have different voltages for the two sections. The principal parameters of the five transmission system alternatives to be analyzed in detail are as follows.

Alternative	Susitna to Anchorage		Susitna to Fairbanks	
	Number of Circuits	Voltage (kV)	Number of Circuits	Voltage (kV)
1	2	345*	2	345
2	3	345	2	345
3	2	345*	2	230*
4	3	345	2	230*
5	2	500	2	230*

*Denotes series compensation.

Single-line diagrams explaining the details of the two most promising system configurations, Alternatives 1 and 2, are shown in Figures 3.1 and 3.2.

3.6 - Electric System Studies

Early in the system studies, it was realized that 345 kV was the one voltage which showed greatest promise for transmission from Susitna to both Anchorage and Fairbanks. A 500-kV system has higher transmission capabilities but at significantly higher costs. Transmission at 230 kV is insufficient for the section from Susitna to Anchorage, and all dual voltage systems have increased complications and decreased reliability at little or no economic advantage. For these reasons, 500-kV and 230-kV system alternatives were only analyzed sufficiently to determine their equipment ratings so that cost estimates could be prepared.

3.6.1 - Power Transfer

After studying various reports and obtaining preliminary information on the staging of Susitna from Subtask 6.36, Generation Planning, the electric system studies were able to proceed in December 1980. Table 3.2 shows the preliminary staging schedule for the Susitna development. The maximum power to be transmitted to Anchorage and Fairbanks for each stage of development, based on the 85 percent and 25 percent limits is given in Table 3.3. The load power factor is assumed to be 0.95 and the power factor rating of the Susitna generators is assumed to be 0.90.

Following determination of the system power transfer requirements for each stage of Susitna development, alternative system configurations were developed taking into account the following

- initial Susitna development at the Watana site

- a major switching station at Devil Canyon or near Gold Creek

- possible intermediate switching at Willow and Healy.

Preliminary line lengths for the system configurations under study were obtained from Subtask 8.03, Transmission Line Route Selection.

3.6.2 - Conductor Sizes

Based on the transmission and power transfer requirements at the various stages of Susitna development, economic conductor sizes are determined. The methodology used to obtain the economic conductor size and the results obtained are outlined in Appendix C, Economic Conductor Sizes. Also included in Appendix C are the capitalized costs of transmission line losses. The costs of these losses are taken into account in comparing the overall costs of alternative transmission schemes.

When determining appropriate conductor size, the economic conductor is checked for radio interference (RI) and corona performance. If RI and corona performance are within acceptable limits, then the economic conductor size is used. However, where the RI and corona performance are found to be limiting, the conductor selection is based on these requirements.

Total line losses for the proposed conductor size for each of the different line voltages being considered are given in Table 3.4. These losses are for the alternatives where a major switching station is located at Devil Canyon. The losses given are the total line losses for transmission from Devil Canyon to Anchorage and from Devil Canyon to Fairbanks. The line from Devil Canyon to Anchorage is 155 miles long. The losses were calculated for the

maximum expected power transfer to Anchorage and to Fairbanks for each of the stages of the Susitna development as given in Table 3.3.

3.6.3 - Line Energizing

Transmission line energizing studies were carried out to determine the need for and ratings of reactive shunt compensation at the receiving ends of transmission line sections at the various voltages. This compensation is required to limit overvoltages during line energizing to acceptable levels. Shunt reactors are required at Willow and Anchorage for the 500-kV transmission alternative and at Fairbanks for 345-kV transmission. These reactors are switched with EHV breakers directly to the respective transmission lines in order to be connected prior to energizing of the line sections. The breakers are required to disconnect the reactors at times of heavy line flows, and especially during line outage conditions. This arrangement reduces the need for capacitive var generation to compensate for the reactors. The results of the line energizing analysis are shown in Tables 3.5 to 3.7. Included in the tables are values which fall outside the proposed planning critera and must be corrected with shunt reactors as indicated.

3.6.4 - Load Flow Studies

Load flow studies confirmed satisfactory system performance under both normal and emergency conditions for all transmission alternatives. Emergency conditions tested include outages of any single 345-kV transmission circuit for the 345-kV alternatives as well as the critical outages of a 500-kV circuit between Devil Canyon and Willow and a 230-kV circuit between Devil Canyon and Fairbanks for the 500-kV and 230-kV alternatives.

Voltages on the 138-kV and 230-kV load buses range from 0.99 to 1.02 per unit for normal operation and from 0.93 to 1.02 per unit under emergency outage conditions. Voltage ranges on the EHV systems were 0.95 to 1.04 and 0.90 to 1.04 for normal and emergency conditions, respectively.

Load conditions were assumed to be at peak demand with Susitna generation fully utilized and only minimal other generation available on the system. This situation is expected to result in the most critical operating conditions. Total load is 1,600 MW at a power factor of 0.95. System load distribution was simulated at a maximum of 85 percent of the total load for Anchorage and a maximum of 25 percent for Fairbanks. Generation assumed for the above load conditions includes Susitna capability fully utilized (Watana 800 MW, Devil Canyon 600 MW) plus 300 MW of coal-fired generation at Beluga and 100 MW of gas turbines at each of Anchorage and Fairbanks. All of the thermal units are assumed to be running at approximately half load in order to provide 250 MW of spinning reserve.

Load flow diagrams showing normal system operation at peak demand for 85/15 percent and 75/25 percent load sharing for transmission Alternatives 1 and 2 are included as Figures 3.3 to 3.6. The load flow diagrams show a system configuration containing two terminal stations in Anchorage with a subtransmission voltage of 138 kV. Transmission from Beluga is represented as a 345-kV infeed. In the final analysis the transmission between Willow and Anchorage will include approximately four miles of submarine cable for the Knik Arm crossing, but this is not represented in the initial studies. Switching of the 345-kV shunt reactors at Fairbanks is not shown in the diagrams, but these will be disconnected for peak demand and line outage conditions as required. While these changes have significant effects on transmission system equipment costs, they do not significantly affect system operation. For this reason, they were included in the latest cost estimates but not in the electric

system studies to avoid repeated updating of system parameters. System performance was found to be critical for line outages between Devil Canyon and Willow and between Devil Canyon and Fairbanks. Consequently, it was these line outages which determined the ratings of static var sources and series compensation.

The required ratings of compensation equipment for the five transmission alternatives are listed in Table 3.8.

3.6.5 - Transient Stability

Detailed transient stability studies were carried out only for the 345-kV transmission Alternatives 1 and 2.

Before the studies had advanced to the stage of stability analysis, alternatives containing 500-kV or 230-kV transmission had been recognized to be noncompetitive with the remaining 345-kV alternatives, on either economic or technical grounds. A 500-kV transmission to Anchorage would have sufficient surplus capability to ensure stable operation. On the other hand, should 230-kV transmission to Fairbanks ever have to be reconsidered, transient stability would still need to be confirmed.

As outlined in the planning criteria, the design fault for transient stability analysis is a 3-phase fault. In the preliminary studies, the fault was cleared in 4.8 cycles at both ends of the faulted line section, rather than in 4.8 and 6 cycles at the near and remote ends, respectively, as stipulated in the planning criteria. A test run for the most critical system condition confirmed that the additional delay does not significantly affect system performance.

Transient stability was analyzed for a 3-phase fault on the 345-kV line from Devil Canyon to Willow (with 85 percent of the system

load at Anchorage) and similarly on the line from Devil Canyon to Fairbanks (with 25 percent of system load at Fairbanks). To simulate worst conditions, the fault was assumed to be near Devil Canyon in both cases. The fault was cleared in 4.8 cycles without reclosure. System transient behavior was observed for a period of 1 second after the fault. Exciter and governor response in the transient interval was ignored. The dynamic voltage regulating capabilities of the static var sources at Anchorage and Fairbanks were ignored as well. For the final analysis a revised computer model (with representation of dynamically variable static var sources) will be available.

The attached swing curves, Figures 3.7 to 3.10, show the rotor angles of all generators relative to the rotor angles at Watana. All generators recover from the first and second swings for both transmission alternatives. The actions of exciters and governors should ensure that these swings are damped out and return the system to a new equilibrium after each disturbance. System transient behavior seems to be quite sensitive to the generation on-line at both Anchorage and Fairbanks at the time of a fault. Detailed analysis at the design stages will have to determine the minimum spinning reserve required at both Anchorage and Fairbanks to ensure system stability in the event of a major fault. The transient studies are considered adequate to confirm the stability of the system configuration and the primary equipment parameters needed to ensure satisfactory operation.

3.7 - Economic Studies

Economic studies were carried out to determine the capital and operating costs and to compare the total life cycle costs of the various transmission alternatives. The economic studies exclude the costs of the Knik Arm crossing and terminal stations in Anchorage. These were considered common to all alternatives (for a 230-kV crossing). They will have to be included in the final analysis.

3.7.1 - Cost Estimates

The transmission cost estimates include all costs for transmission lines and substations. All estimates include the costs of land acquisition and clearing. Included in the substation cost estimates are site preparation and all equipment costs for circuit breakers, transformers, shunt reactors, static var sources and transmission line series capacitors. Cost estimates of major equipment include the costs of all ancillaries such as disconnect switches, potential transformers, current transformers, controls, instrumentation, etc. At the generating stations all EHV circuit breakers are included, but generator transformers and low-voltage breakers are excluded. These are included in the powerhouse estimates. Similarly at the load centers all EHV breakers are included as well as the necessary circuit entries at the subtransmission voltage (230 kV or 138 kV) for each transformer bank. The remainder of the lower voltage station is common to all alternatives and therefore excluded from the comparison. At Anchorage, transformation to 230 kV is assumed on the west side of Knik Arm implying cable crossings at 230 kV. The cable crossings and other 230-kV equipment are considered common to all ac transmission alternatives for Susitna and their costs have been excluded from this comparison. They must be included for comparison of schemes with different Knik Arm crossing configurations such as HVDC transmission from Susitna.

The unit costs and assumptions in the cost estimates are shown in Table 3.9.

All details on which the cost estimates are based are given in detail in Appendix D.

3.7.2 - Life-Cycle Costs

Life-cycle costs for each transmission alternative were calculated by discounting all cost components over a 50-year lifetime from 1993 to 2043 to a common present worth datum of 1981. The calculations and results of total present-worth costs are shown in Tables 3.10 to 3.14. Included in the life-cycle costs are capital (including engineering, contingencies, land acquisition and clearing and bond commission). Also included are the capitalized annual costs of operation and maintenance, insurance, interim replacement, contribution in lieu of taxes, and transmission losses. A summary of present-worth life-cycle system costs for all five transmission alternatives is shown in Table 3.15.

3.8 - HVDC Transmission

In order to determine the relative economics of HVDC as compared to the preferred ac transmission alternative an economic screening was carried out. The details of this analysis are given in Appendix E, and the results and significant features are summarized here.

3.8.1 - General

A HVDC transmission system linking Susitna generation with the Anchorage and Fairbanks load areas would need to be either one 3-terminal system or two 2-terminal systems. Another alternative would be a combined scheme using ac transmission from Susitna to one load center and dc transmission to the other. In order to ensure that no possible economic combination is overlooked, transmission to Anchorage and Fairbanks are considered separately.

3.8.2 - Comparative Transmission Systems

The ac and HVDC transmission systems whose costs are compared are essentially comparable in terms of security of supply. Each alternative is planned to maintain rated transfer capability with the single contingency outage of any element in the transmission system.

(a) Ac Transmission

The ac transmission system which is considered as the base case utilizes 345 kV with 3 circuits ultimately to Anchorage and 2 circuits to Fairbanks. Transmission to the load centers originates at a switching station at Devil Canyon with Watana generation brought in at 345 kV.

Transmission to Fairbanks is direct to a 345-kV/138-kV terminal station at the load center.

Transmission to Anchorage involves an intermediate switching station at Willow and proceeds to a 345-kV/230-kV station on the west side on Knik Arm. At this point transmission continues via a 230-kV submarine cable* to the east side of Knik Arm and into a terminal station from which local distribution circuits would radiate.

*Transformation to 230 kV and use of 230-kV submarine cable is not necessarily the optimum arrangement, but it is considered adequate for the ac versus HVDC economic screening.

(b) HVDC Transmission

The HVDC converter terminals are assumed to be located at Devil Canyon with local ac transmission at 230 kV between Watana and Devil Canyon.

Transmission to Fairbanks is via a single bipolar HVDC line operating at ±250 kV, with an inverter terminal and 138-kV circuit entries at the load end.*

Transmission to Anchorage is also at ±250 kV but would require 2 bipolar HVDC circuits to meet the security constraints. These circuits would proceed directly to Anchorage, utilizing HVDC submarine cables across Knik Arm and into an inverter station on the east side of Knik Arm. The inverter output is via 230-kV circuit entries which would supply local distribution identical to the ac alternative. The cost of a separate 230-kv ac supply from Point McKenzie to Willow is allowed for, so that both ac and dc alternatives would be functionally equivalent.

3.8.3 - Comparative Costs

The details of equipment ratings and unit costs are given in Appendix E; the results are summarized in Table 3.16.

Individual costs are given for line and terminal facilities in order to illustrate the basic relationships between ac and HVDC transmission costs. All capital costs are for the ultimate installation with no discounting of staged components. The

*During the single contingency outage of one pole of the line or terminal facilities, earth return would be utilized to maintain rated power flow to Fairbanks.

capitalization of annual charges such as operating costs and the cost of losses is at 3 percent discount rate over the 50-yr life of facilities.

As the comparative costs show there is no obvious cost advantage favoring HVDC over ac transmission either to Anchorage or to Fairbanks. This is particularly true in the case of Anchorage where HVDC is over 20 percent more costly than ac transmission. The margin favoring ac is only 8 percent in the case of transmission to Fairbanks, and although this might be reduced by further study, it is unlikely the savings would be sufficient to justify the operating complexity of combined ac and HVDC systems.

On the basis of this economic screening it is concluded that ac is an appropriate choice for transmission from Susitna to the load centers at Anchorage and Fairbanks.

TABLE 3.1: RAILBELT REGION PEAK AND ENERGY DEMAND FORECASTS USED FOR GENERATION PLANNING STUDIES

	LOAD CASE											
	Low Plus Load Management and Conservation (LES-GL Adjusted)[1]			Low (LES-GL)[2]			Medium (MES-GM)[3]			High (HES-GH)[4]		
Year	MW	GWh	Load Factor	MW	GWh	Load Factor	MW	GWh	Load Factor	MW	GWh	Load Factor
1980	510	2790	62.5	510	2790	62.4	510	2790	62.4	510	2790	62.4
1985	560	3090	62.8	580	3160	62.4	650	3570	62.6	695	3860	63.4
1990	620	3430	63.2	640	3505	62.4	735	4030	62.6	920	5090	63.1
1995	685	3810	63.5	795	4350	62.3	945	5170	62.5	1295	7120	62.8
2000	755	4240	63.8	950	5210	62.3	1175	6430	62.4	1670	9170	62.6
2005	835	4690	64.1	1045	5700	62.2	1380	7530	62.3	2285	12540	62.6
2010	920	5200	64.4	1140	6220	62.2	1635	8940	62.4	2900	15930	62.7

Notes:

[1] LES-GL: Low economic growth/low government expenditure with load management and conservation.

[2] LES-GL: Low economic growth/low government expenditure.

[3] MES-GM: Medium economic growth/moderate government expenditure.

[4] HES-GH: High economic growth/high government expenditure.

TABLE 3.2: STAGING OF THE SUSITNA DEVELOPMENT

Year	Susitna Capacity - MW				
	Watana Increments	Total	Devil Canyon Increments	Total	Susitna Total
1993	400	400	-	-	400
1996	400	800	-	-	800
2000	-	-	400	400	1,200
2000 (optional)	-	-	200	600	1,400

TABLE 3.3: MAXIMUM POWER TO BE TRANSMITTED TO ANCHORAGE AND FAIRBANKS FOR EACH STAGE OF SUSITNA DEVELOPMENT

Total Susitna Capacity (MW)	Maximum Power Transmission	
	To Anchorage (MW)	To Fairbanks (MW)
400	340	100
800	680	200
1,200	1,020	300
1,400	1,190	350

Note: For system planning purposes a maximum of 85 percent of Susitna generation is assumed to be transmitted to Anchorage and a maximum of 25 percent to Fairbanks.

TABLE 3.4: LINE LOSSES UNDER MAXIMUM POWER TRANSMISSION

Susitna Capacity (MW)	Devil Canyon to Anchorage (155 mi) Power Transmitted (MW)	500 kV 2 Circuits (MW)	345 kV 2 Circuits (MW)	345 kV 3 Circuits (MW)
400	340	1.5	3.2	2.9
800	680	6.2	12.8	11.2
1,200	1,020	13.8	28.8	25.5
1,400	1,190	18.8	39.2	35.3

Susitna Capacity (MW)	Devil Canyon to Fairbanks (189 mi) Power Transmitted (MW)	345 kV 2 Circuits (MW)	230 kV 2 Circuits (MW)
400	100	0.5	1.5
800	200	2.0	6.1
1,200	300	4.6	13.7
1,400	350	6.3	18.6

TABLE 3.5: TRANSMISSION LINE ENERGIZING

Transmission Alternative 1

Line Section	Length (mi)	Line Reactors (receiving end) (MVAR)	No. of Circuits at 345 kV	No. and Size of Conductors (kcmil)	Watana Generation (MW)	Sending End Short Circuit Level (MVA)	Sending End Initial Voltage (per unit)	Sending End Final Voltage (per unit)	Sending End Voltage Rise (per unit)	Sending End Line Flow (MVAR)	Receiving End Voltage (per unit)
Devil Canyon - Fairbanks	189	0	2	2 x 795	200	541	0.900	1.189[2]	0.289[2]	229	1.283[2]
Devil Canyon - Fairbanks	189	75	2	2 x 795	200	541	0.900	1.025	0.125	85	1.028
Devil Canyon - Fairbanks	189	75	2	2 x 795	400	1006	0.950	1.025	0.075	85	1.028
Devil Canyon - Fairbanks	189	75	2	2 x 795	800	1768	1.000	1.048	0.048	89	1.051
Devil Canyon - Willow[3]	90	0	2	2 x 1272[1]	200	541	0.900	1.017	0.117	80	1.035
Devil Canyon - Willow[3]	90	0	2	2 x 1272[1]	400	1006	0.950	1.021	0.071	80	1.038
Devil Canyon - Willow[3]	90	0	2	2 x 1272[1]	800	1768	1.000	1.046	0.046	84	1.063
Willow - Anchorage[3]	65[1]	0	2	2 x 1272[1]	200	436	0.950	1.073	0.123	64	1.083
Willow - Anchorage[3]	65[1]	0	2	2 x 1272[1]	400	696	0.950	1.024	0.074	58	1.033
Willow - Anchorage[3]	65[1]	0	2	2 x 1272[1]	800	992	0.950	1.000	0.050	55	1.009

Notes: [1]The distance from Willow to Anchorage and conductor size from Susitna to Anchorage will be revised for the final analysis.

[2]Shunt reactors are required at Fairbanks to satisfy voltage rise criteria.

[3]Results for the line sections Devil Canyon - Willow - Anchorage are also valid for Transmission Alternative 3.

TABLE 3.6: TRANSMISSION LINE ENERGIZING

Transmission Alternative 2

Line Section	Length (mi)	Line Reactors (receiving end) (MVAR)	No. of Circuits at 345 kV	No. and Size of Conductors (kcmil)	Watana Generation (MW)	Sending End: Short Circuit Level (MVA)	Sending End: Initial Voltage (per unit)	Sending End: Final Voltage (per unit)	Sending End: Voltage Rise (per unit)	Sending End: Line Flow (MVAR)	Receiving End Voltage (per unit)
Devil Canyon - Fairbanks	189	0	2	2 x 795	200	541	0.900	1.189[2]	0.289[2]	229	1.283[2]
Devil Canyon - Fairbanks	189	75	2	2 x 795	200	541	0.900	1.025	0.125	85	1.028
Devil Canyon - Fairbanks	189	75	2	2 x 795	400	1006	0.950	1.025	0.075	85	1.028
Devil Canyon - Fairbanks	189	75	2	2 x 795	800	1768	1.000	1.048	0.048	89	1.051
Devil Canyon - Willow[3]	90	0	3	2 x 954	200	541	0.900	1.013	0.113	76	1.030
Devil Canyon - Willow[3]	90	0	3	2 x 954	400	1006	0.950	1.018	0.068	77	1.035
Devil Canyon - Willow[3]	90	0	3	2 x 954	800	1768	1.000	1.044	0.044	81	1.062
Willow - Anchorage[3]	65[1]	0	3	2 x 954	200	433	0.950	1.069	0.119	61	1.078
Willow - Anchorage[3]	65[1]	0	3	2 x 954	400	688	0.950	1.022	0.072	56	1.031
Willow - Anchorage[3]	65[1]	0	3	2 x 954	800	976	0.950	0.999	0.049	53	1.008

Notes: [1]The distance from Willow to Anchorage will be revised for the final analysis.

[2]Shunt reactors are required at Fairbanks to satisfy voltage rise criteria.

[3]Results for the line sections Devil Canyon - Willow - Anchorage are also valid for Transmission Alternative 4.

TABLE 3.7: TRANSMISSION LINE ENERGIZING

Transmission Alternative 5

Line Section	Length (mi)	Line Reactors (receiving end) (MVAR)	No. of Circuits at 500 kv	No. and Size of Conductors (kcmil)	Watana Generation (MW)	Sending End Short Circuit Level (MVA)	Sending End Initial Voltage (per unit)	Sending End Final Voltage (per unit)	Sending End Voltage Rise (per unit)	Sending End Line Flow (MVAR)	Receiving End Voltage (per unit)
Devil Canyon - Willow	90	0	2	3 x 795	200	564	0.900	1.184[2]	0.284[2]	234	1.205[2]
Devil Canyon - Willow	90	75	2	3 x 795	200	564	0.900	1.035	0.135	97	1.037
Devil Canyon - Willow	90	75	2	3 x 795	400	1091	0.950	1.027	0.077	96	1.029
Devil Canyon Willow	90	75	2	3 x 795	800	2044	1.000	1.046	0.046	99	1.048
Willow - Anchorage	50[1]	0	2	3 x 795	200	506	0.950	1.137[2]	0.187[2]	119	1.143[2]
Willow - Anchorage	50[1]	50	2	3 x 795	200	506	0.950	1.027	0.077	44	1.026
Willow - Anchorage	50[1]	50	2	3 x 795	400	892	1.000	1.049	0.049	46	1.049
Willow - Anchorage	50[1]	50	2	3 x 795	800	1443	1.000	1.030	0.030	44	1.029

Notes: [1]The distance from Willow to Anchorage will be revised for the final analysis.

[2]Shunt reactors are required at Willow and Anchorage to satisfy voltage rise criteria.

[3]Shunt compensation is not required for 230-kV lines Devil Canyon to Fairbanks, Alternatives 3, 4 and 5.

TABLE 3.8: RATINGS OF REACTIVE COMPENSATION REQUIRED

Transmission Alternative	Fairbanks			Anchorage			Willow		
	Static VAR Source (MVAR)	Shunt Reactor (MVAR)	Series Capacitor (MVAR)	Static VAR Source (MVAR)	Shunt Reactor (MVAR)	Series Capacitor (MVAR)	Static VAR Source (MVAR)	Shunt Reactor (MVAR)	Series Capacitor (MVAR)
1	100	2 x 75	-	400	-	430	-	-	773
2	100	2 x 75	-	400	-	-	-	-	-
3	200	-	430	400	-	430	-	-	773
4	200	-	430	400	-	-	-	-	-
5	200	-	430	200	2 x 50	-	-	2 x 75	-

TABLE 3.9: TRANSMISSION AND SUBSTATION UNIT COSTS

Transmission

Line Costs

Voltage (kV)	Conductor (kcmil)	Base Cost $/Circuit Mile	Final Cost[1] $/Circuit Mile
230	1 x 954	120,000	162,000
230	1 x 1272	136,000	184,000
230	1 x 1351	140,000	189,000
345	2 x 795	190,000	256,000
345	2 x 954	207,000	279,000
345	2 x 1351	251,000	339,000
500	3 x 795	326,000	440,000

Land Acquisition and Clearing

Voltage (kV)	No. of Circuits	$/Mile
230	2	70,000
345	2	75,000
345	3	96,000
500	2	80,000

Table 3.9
Transmission and Substation Unit Costs - 2

Substations

Voltage (kV)	Station Base Cost[2] ($ Million)	Circuit Breaker Position ($ Million)
138	1.000	0.400
230	1.500	0.700
345	2.000	1.000
500	2.500	1.600

Autotransformers (including 15 kV tertiary)

Voltage (kV)	75 MVA ($ Million)	150 MVA ($ Million)	250 MVA ($ Million)
230/138	-	0.800	1.100
345/138	0.500	0.900	1.300
500/138	0.700	1.200	1.600
345/230	-	0.900	1.300
500/230	-	1.200	1.600

Generator Transformers

Voltage (kV)	$/kVA
345	4.20
500	5.00

Table 3.9
Transmission and Substation Unit Costs - 3

Shunt Reactors

Voltage (kV)	50 MVARS ($/kVAR)	75 MVARS ($/kVAR)
345	-	1.11
500	24.60	17.20

Series Compensation (all voltages)

$14.00/kVAR

Static VAR Sources (tertiary voltage)

$30.00/kVAR

Notes:

[1] Final transmission line costs (Sheet 1) include 20 percent contingency, plus 5 percent engineering, 5 percent construction management, and 2.5 percent owner's cost.

[2] Substation base cost (Sheet 2) includes land acquisitions, site preparation, foundations, etc.

TABLE 3.10: LIFE CYCLE COSTS

Transmission Alternative 1

Susitna to Anchorage - 2 x 345 kV, 2 x 1351 kcmil, 50 percent series compensation.
Susitna to Fairbanks - 2 x 345 kV, 2 x 795 kcmil, no series compensation.

	1993 Costs		2000 Costs		Total
	Current $ x 10^6	1981 P.W.	Current $ x 10^6	1981 P.W.	1981 P.W.
Line Capital					
Line Capital Cost	220.12				
1.5 percent Bond Commission	3.30				
Total Line Cost	223.42	156.70			156.70
Land Acquisition	26.70	18.73			18.73
Capitalized Annual Charges	181.56	127.34			127.34
Capitalized Line Losses	75.66	53.07			53.07
Station Capital					
Station Capital Cost	123.88		44.74		
1.5 percent Bond Commission	1.86		0.67		
Total Station Cost	125.74	88.19	45.41	25.90	114.09
Capitalized Annual Charges	135.46	95.01	45.60	26.01	121.02
1981 Present Worths		539.04		51.91	
Total Life Cycle Cost					590.95

TABLE 3.11: LIFE CYCLE COSTS

Transmission Alternative 2

Susitna to Anchorage - 3 x 345 kV, 2 x 954 kcmil, no series compensation.
Susitna to Fairbanks - 2 x 345 kV, 2 x 795 kcmil, no series compensation.

	1993 Costs		2000 Costs		Total
	Current $ x 10^6	1981 P.W.	Current $ x 10^6	1981 P.W.	1981 P.W.
Line Capital					
Line Capital Costs	192.25		39.12		
1.5 percent Bond Commission	2.88		0.59		
Total Line Cost	195.13	136.86	39.71	22.65	159.51
Land Acquisition	29.64	20.79			20.79
Capitalized Annual Charges	160.76	112.75	30.49	17.39	130.14
Capitalized Line Losses	77.70	54.50			54.50
Station Capital					
Station Capital Cost	123.88		31.47		
1.5 percent Bond Commission	1.86		0.47		
Total Station Cost	125.74	88.19	31.94	18.21	106.40
Capitalized Annual Charges	135.46	95.01	32.07	18.29	113.30
1981 Present Worths		508.10		76.54	
Total Life Cycle Cost					584.64

TABLE 3.12: LIFE CYCLE COSTS

Transmission Alternative 3

Susitna to Anchorage - 2 x 345 kV, 2 x 1351 kcmil, 50 percent series compensation.
Susitna to Fairbanks - 2 x 230 kV, 1 x 1272 kcmil, 50 percent series compensation.

	1993 Costs		2000 Costs		Total
	Current $ x 10^6	1981 P.W.	Current $ x 10^6	1981 P.W.	1981 P.W.
Line Capital					
Line Capital Cost	188.18				
1.5 percent Bond Commission	2.82				
Total Line Cost	191.00	133.96			133.96
Land Acquisition	25.76	18.07			18.07
Capitalized Annual Charges	153.17	107.43			107.43
Capitalized Line Losses	91.97	64.51			64.51
Station Capital					
Station Capital Cost	135.95		54.48		
1.5 percent Bond Commission	2.04		0.82		
Total Station Cost	137.99	96.78	55.30	31.54	128.32
Capitalized Annual Charges	148.66	104.27	55.53	31.67	135.94
1981 Present Worths		525.02		63.21	
Total Life Cycle Cost					588.23

TABLE 3.13: LIFE CYCLE COSTS

Transmission Alternative 4

Susitna to Anchorage - 3 x 345 kV, 2 x 954 kcmil, no series compensation.
Susitna to Fairbanks - 2 x 230 kV, 1 x 1272 kcmil, 50 percent series compensation.

	1993 Costs		2000 Costs		Total
	Current $ x 10^6	1981 P.W.	Current $ x 10^6	1981 P.W.	1981 P.W.
Line Capital					
Line Capital Cost	166.16		39.12		
1.5 percent Bond Commission	2.49		0.59		
Total Line Cost	168.65	118.29	39.71	22.65	140.94
Land Acquisition	28.70	20.13			20.13
Capitalized Annual Charges	136.08	95.44	30.49	17.39	112.83
Capitalized Line Losses	93.85	65.82			65.82
Station Capital					
Station Capital Cost	135.95		41.21		
1.5 percent Bond Commission	2.04		0.62		
Total Station Cost	137.99	96.78	41.83	23.86	120.64
Capitalized Annual Charges	148.66	104.27	42.00	23.95	128.22
1981 Present Worths		500.73		87.85	
Total Life Cycle Cost					588.58

TABLE 3.14: LIFE CYCLE COSTS

Transmission Alternative 5

Susitna to Anchorage - 2 x 500 kV, 3 x 795 kcmil, no series compensation.
Susitna to Fairbanks - 2 x 230 kV, 1 x 1272 kcmil, 50 percent series compensation.

	1993 Costs		2000 Costs		Total
	Current $ x 10^6	1981 P.W.	Current $ x 10^6	1981 P.W.	1981 P.W.
Line Capital					
Line Capital Cost	223.72				
1.5 percent Bond Commission	3.36				
Total Line Cost	227.08	159.27			159.27
Land Acquisition	26.59	18.65			18.65
Capitalized Annual Charges	180.95	126.91			126.91
Capitalized Line Losses	61.05	42.82			42.82
Station Capital					
Station Capital Cost	185.06		39.73		
1.5 percent Bond Commission	2.78		0.60		
Total Station Cost	187.84	131.75	40.33	23.00	154.75
Capitalized Annual Charges	202.36	141.93	40.49	23.09	165.02
1981 Present Worths		621.33		46.09	
Total Life Cycle Cost					667.42

TABLE 3.15: SUMMARY OF LIFE CYCLE COSTS

Transmission Alternative	1981 $ x 10^6 1	2	3	4	5
Transmission Lines					
Capital	156.70	159.51	133.96	140.94	159.27
Land Acquisition	18.73	20.79	18.07	20.13	18.65
Capitalized Annual Charges	127.34	130.14	107.43	112.83	126.91
Capitalized Line Losses	53.07	54.50	64.51	65.82	42.82
Total Transmission Line Cost	355.84	364.94	323.97	339.72	347.65
Switching Stations					
Capital	114.09	106.40	128.32	120.64	154.75
Capitalized Annual Charges	121.02	113.30	135.94	128.22	165.02
Total Switching Station Cost	235.11	219.70	264.26	248.86	319.77
Susitna Life Cycle Cost	590.95	584.64	588.23	588.58	667.42

TABLE 3.16: SUMMARY OF COMPARATIVE COSTS AC VERSUS DC TRANSMISSION

Cost Components	Comparative Costs - $ Million			
	Transmission to Anchorage		Transmission to Fairbanks	
	AC	DC	AC	DC
Line Cost				
line capital[1]	198.18	125.40	96.77	37.80
line capitalized O&M[1]	165.72	104.86	80.92	31.61
land acquisition (R.O.W.)[3]	13.44	8.40	14.18	7.56
Station Costs				
station capital[1]	99.38	239.59	35.32	100.10
station capitalized O&M[2]	108.67	262.00	38.62	109.46
Capitalized Cost of Losses[4]	83.87	74.94	13.72	16.63
Total Costs	669.26	815.19	279.53	303.16

[1] Line and station capital costs are developed in Appendix E.

[2] Capitalized O&M charges include O&M, insurance, interim replacement and contributions in lieu of taxes. These annual charges total 3.25 percent of transmission capital and 4.25 percent of station capital, and they are capitalized over 50 years at 3 percent.

[3] Land acquisition (R.O.W.) costs are estimated at $96,000/mile and $75,000/mile for 345 kV, 3 cct and 2 cct transmission respectively, and $60,000/mile and $40,000/mile for ±250 kV dc 2-circuit and single circuit, respectively.

[4] Losses are valued at 3.5¢/kW·h, and they are capitalized over the 50-year line life at 3 percent.

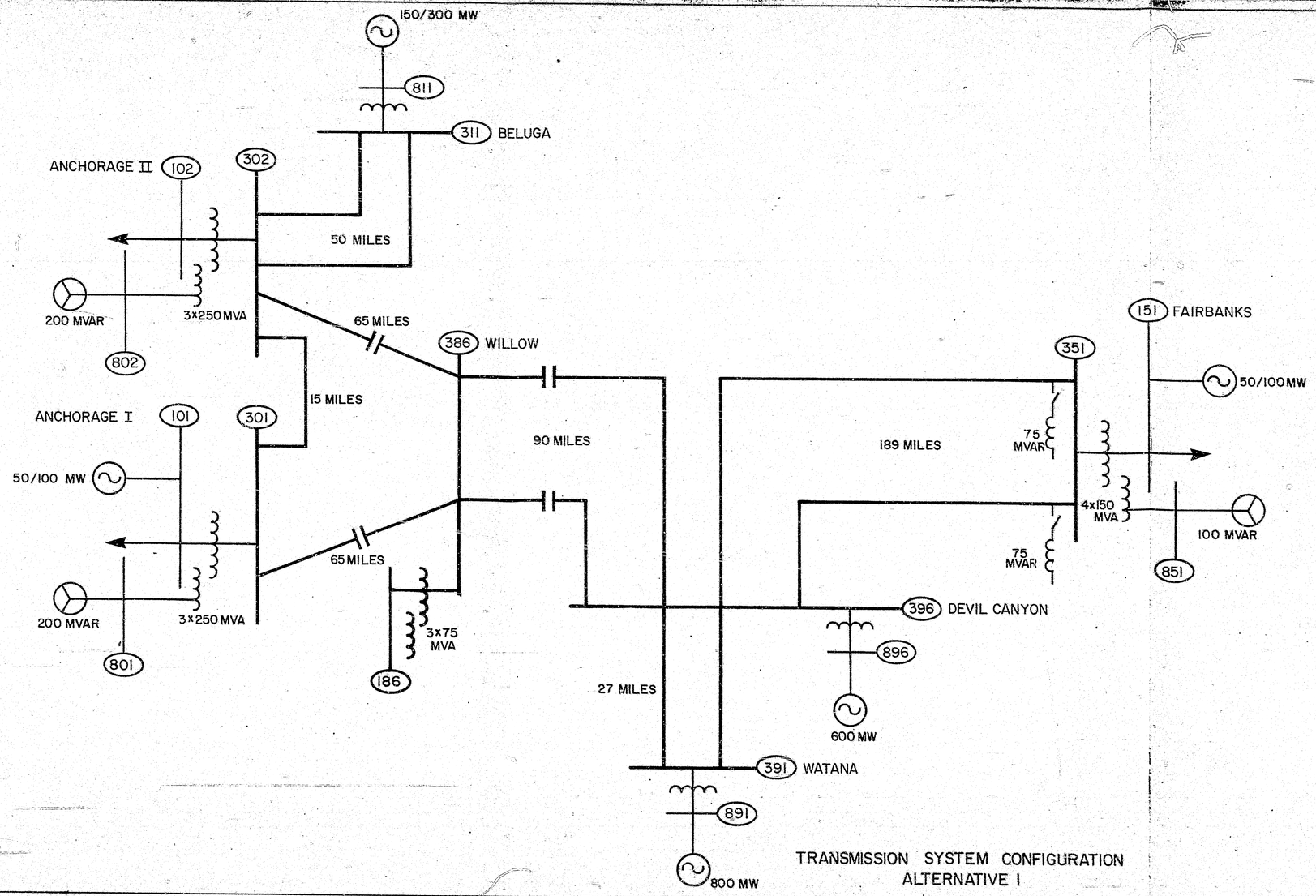

LEGEND

- GENERATION
- LOAD
- STATIC VAR SOURCE
- 386 BUS NUMBER
- REAL POWER FLOW (MW)
- REACTIVE POWER FLOW (MVAR)
- SERIES COMPENSATION
- TRANSFORMER WITH TERTIARY
- SHUNT REACTOR
- 1.03 BUS VOLTAGE MAGNITUDE (PER UNIT)
- 15.5 BUS VOLTAGE PHASE ANGLE (DEGREES)

TRANSMISSION LINES

- 345 KV
- 138 KV OR LOWER

NOTE : EQUIPMENT RATINGS INDICATED ARE FOR ULTIMATE INSTALLATION (YEAR 2000)

TRANSMISSION SYSTEM CONFIGURATION
ALTERNATIVE I

FIGURE 3.1

ACRIS

53
28
RWI

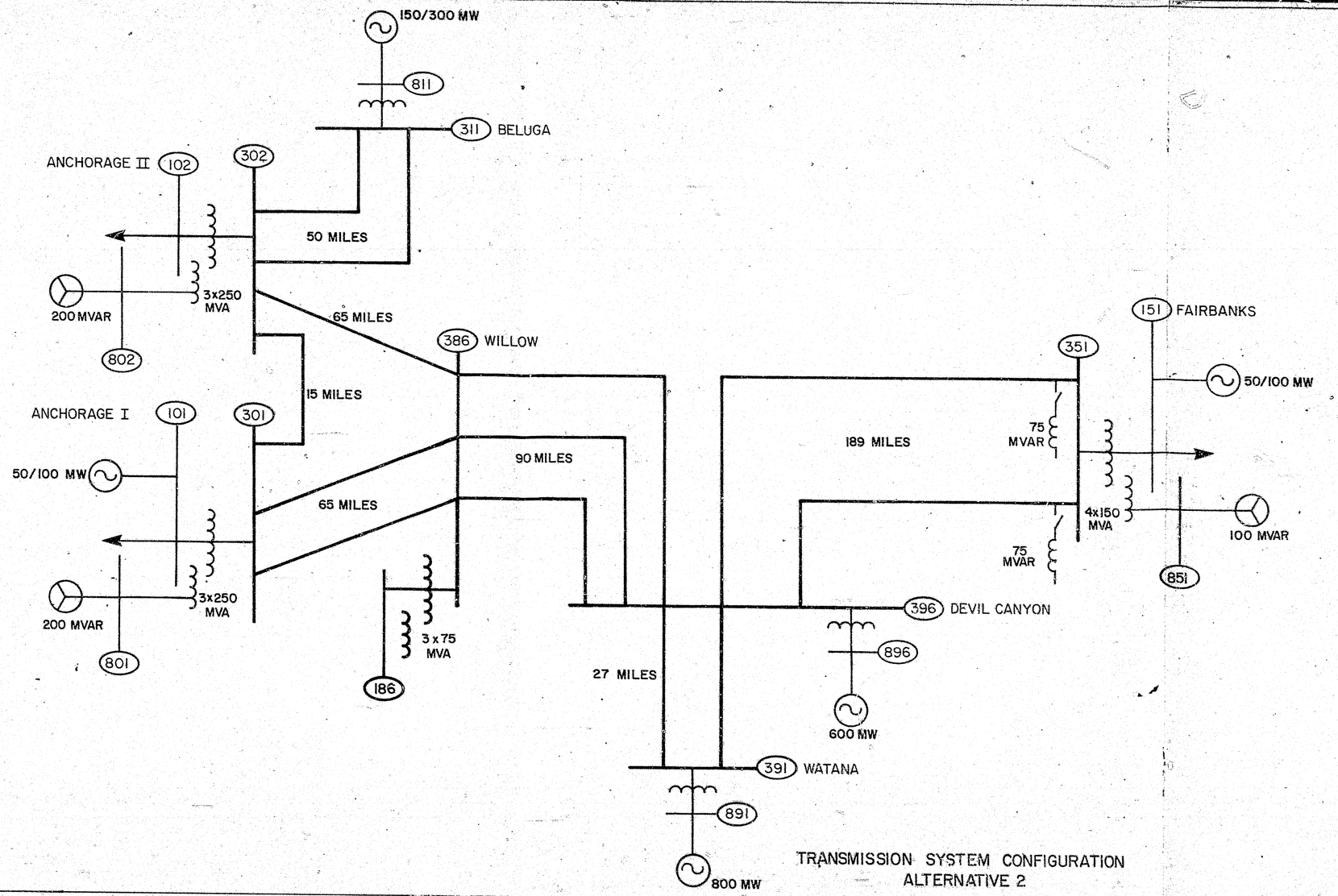

TRANSMISSION SYSTEM CONFIGURATION
ALTERNATIVE 2

LEGEND

- GENERATION
- LOAD
- STATIC VAR SOURCE
- 386 BUS NUMBER
- REAL POWER FLOW (MW)
- REACTIVE POWER FLOW (MVAR)
- SERIES COMPENSATION
- TRANSFORMER WITH TERTIARY
- SHUNT REACTOR
- 1.03 BUS VOLTAGE MAGNITUDE (PER UNIT)
- 15.5 BUS VOLTAGE PHASE ANGLE (DEGREES)

TRANSMISSION LINES

- 345 KV
- 138 KV OR LOWER

NOTE: EQUIPMENT RATINGS INDICATED ARE FOR ULTIMATE INSTALLATION (YEAR 2000)

FIGURE 3.2

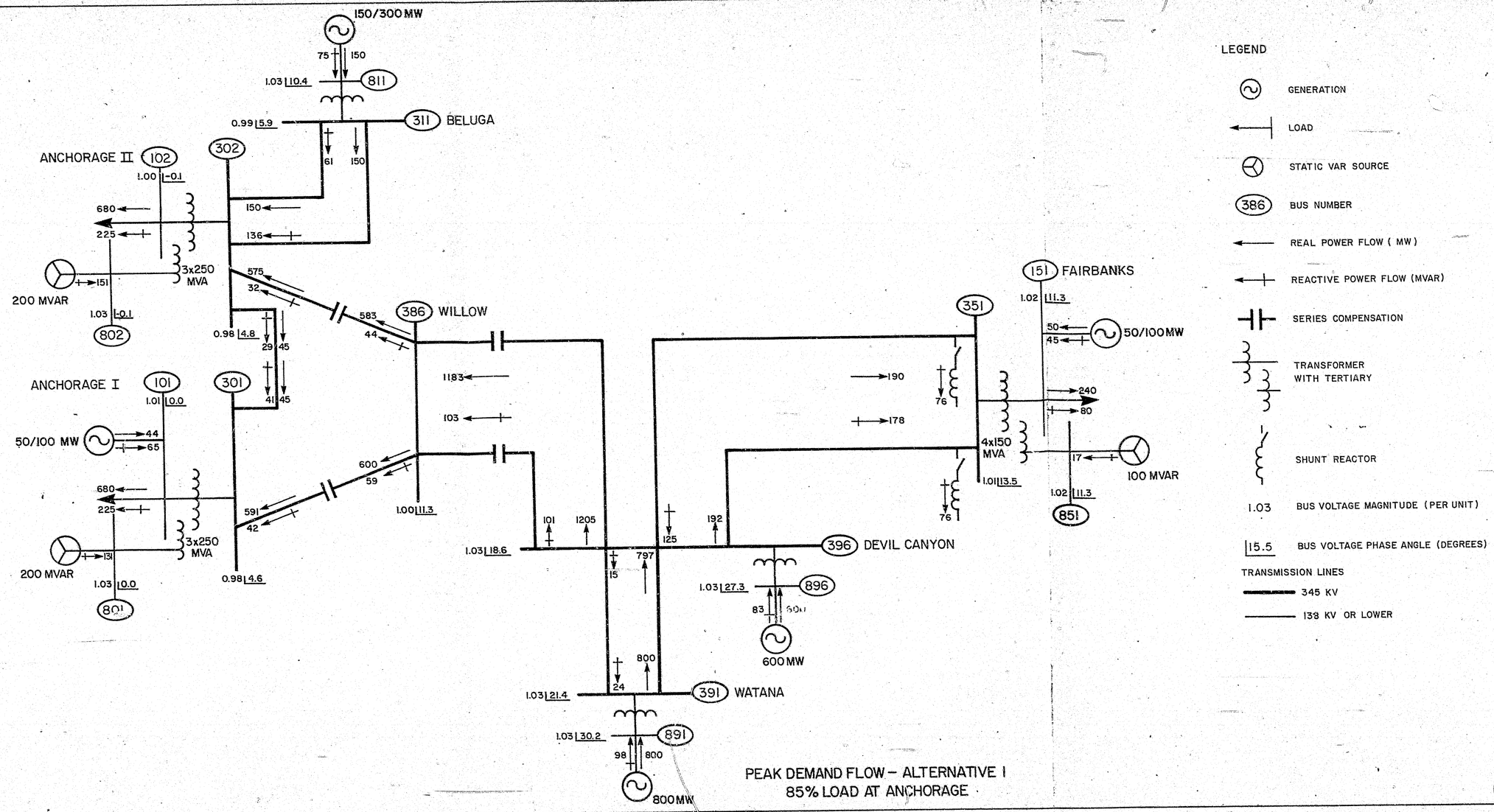

PEAK DEMAND FLOW – ALTERNATIVE I
85% LOAD AT ANCHORAGE

FIGURE 3.3

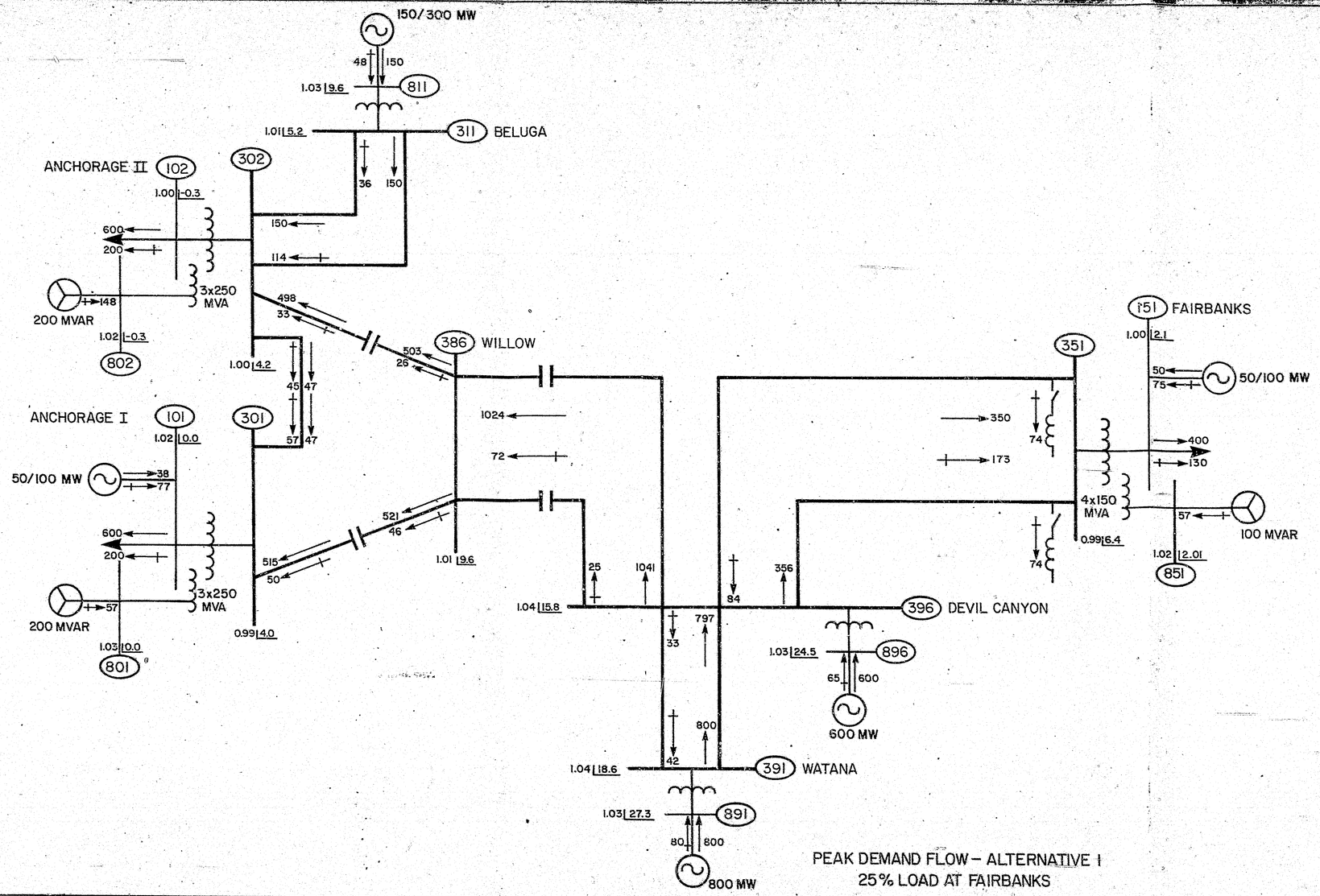

PEAK DEMAND FLOW – ALTERNATIVE I
25% LOAD AT FAIRBANKS

FIGURE 3.4

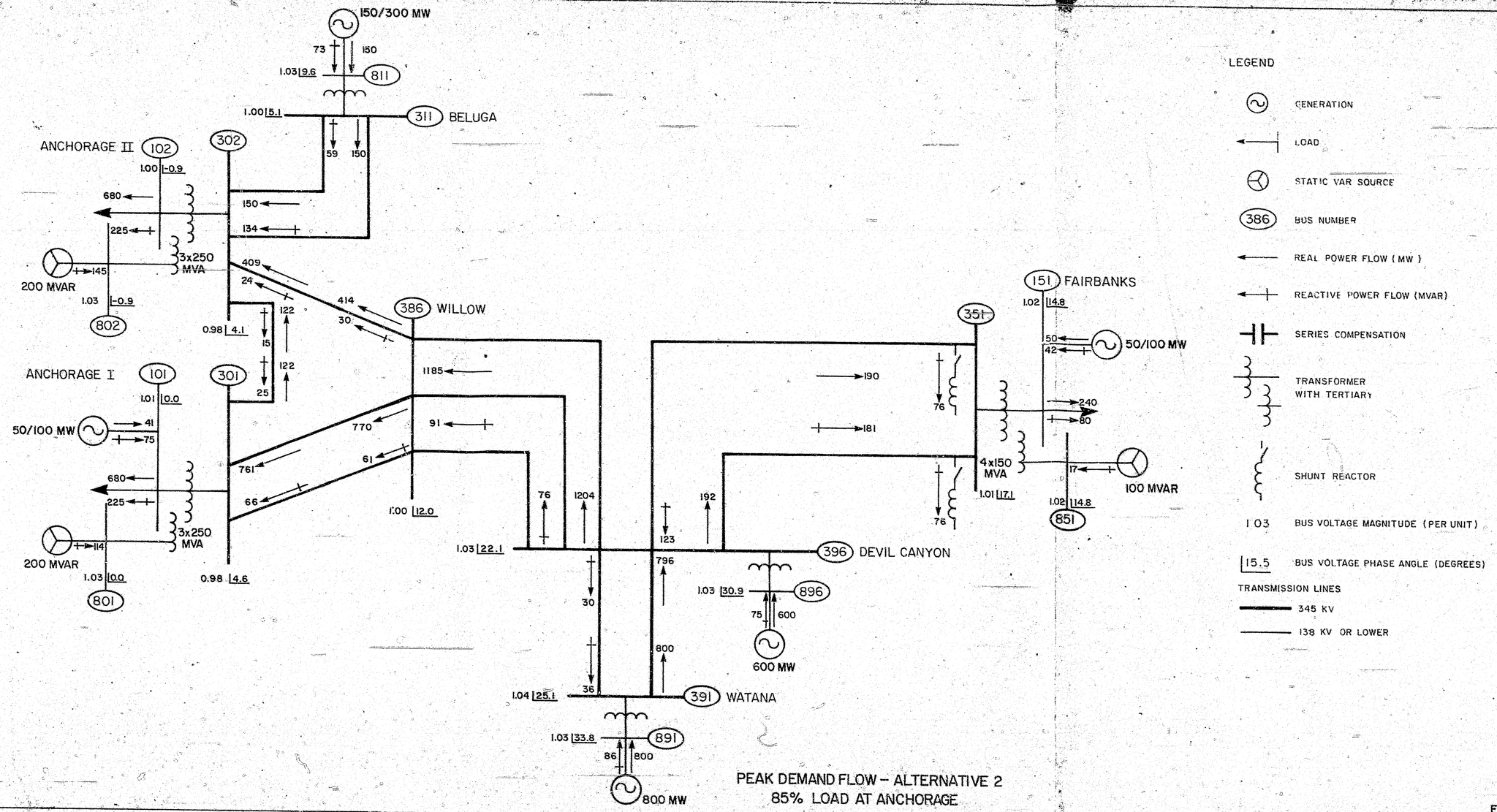

PEAK DEMAND FLOW – ALTERNATIVE 2
85% LOAD AT ANCHORAGE

FIGURE 3.5

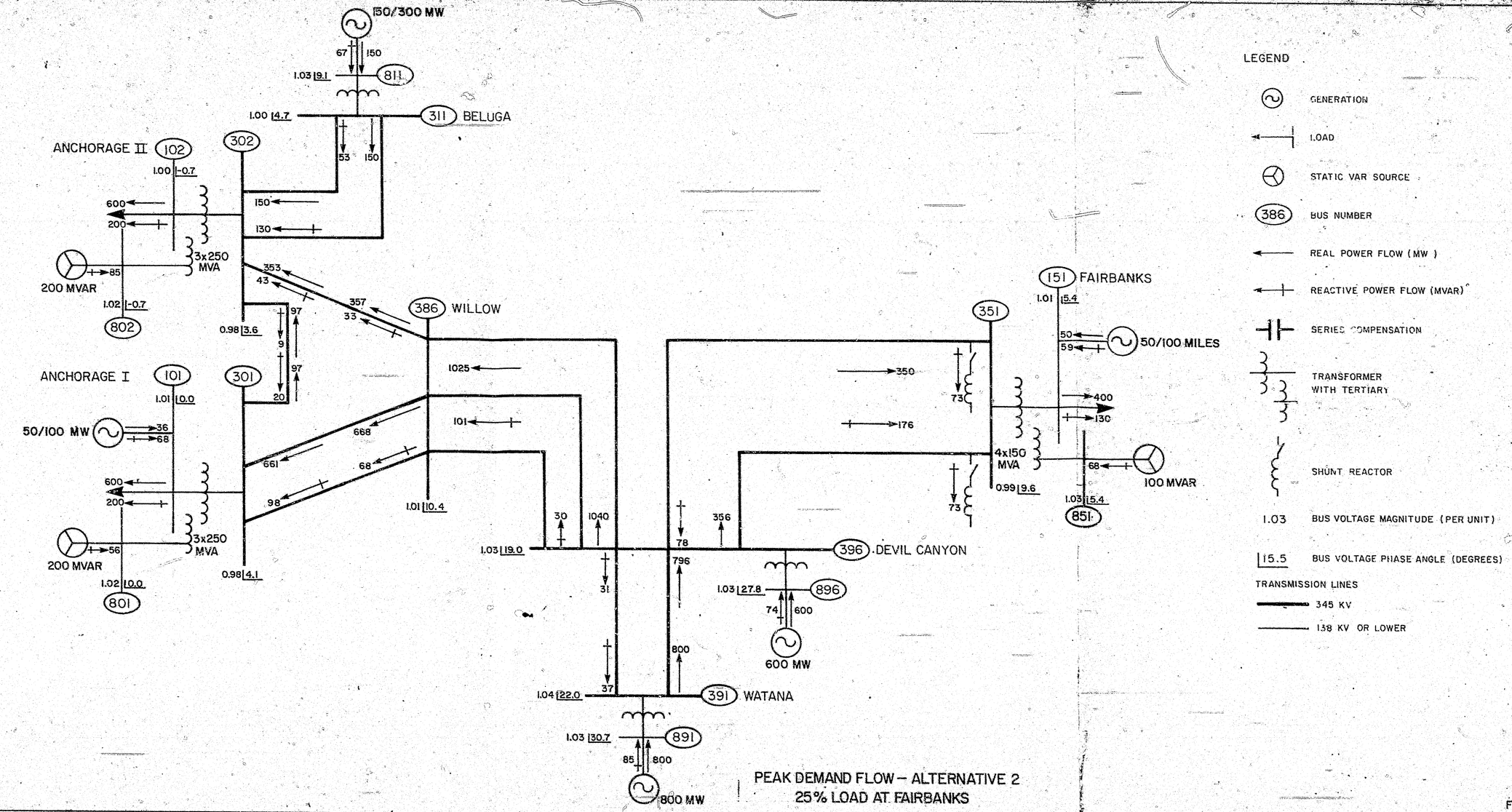

PEAK DEMAND FLOW – ALTERNATIVE 2
25% LOAD AT FAIRBANKS

FIGURE 3.6

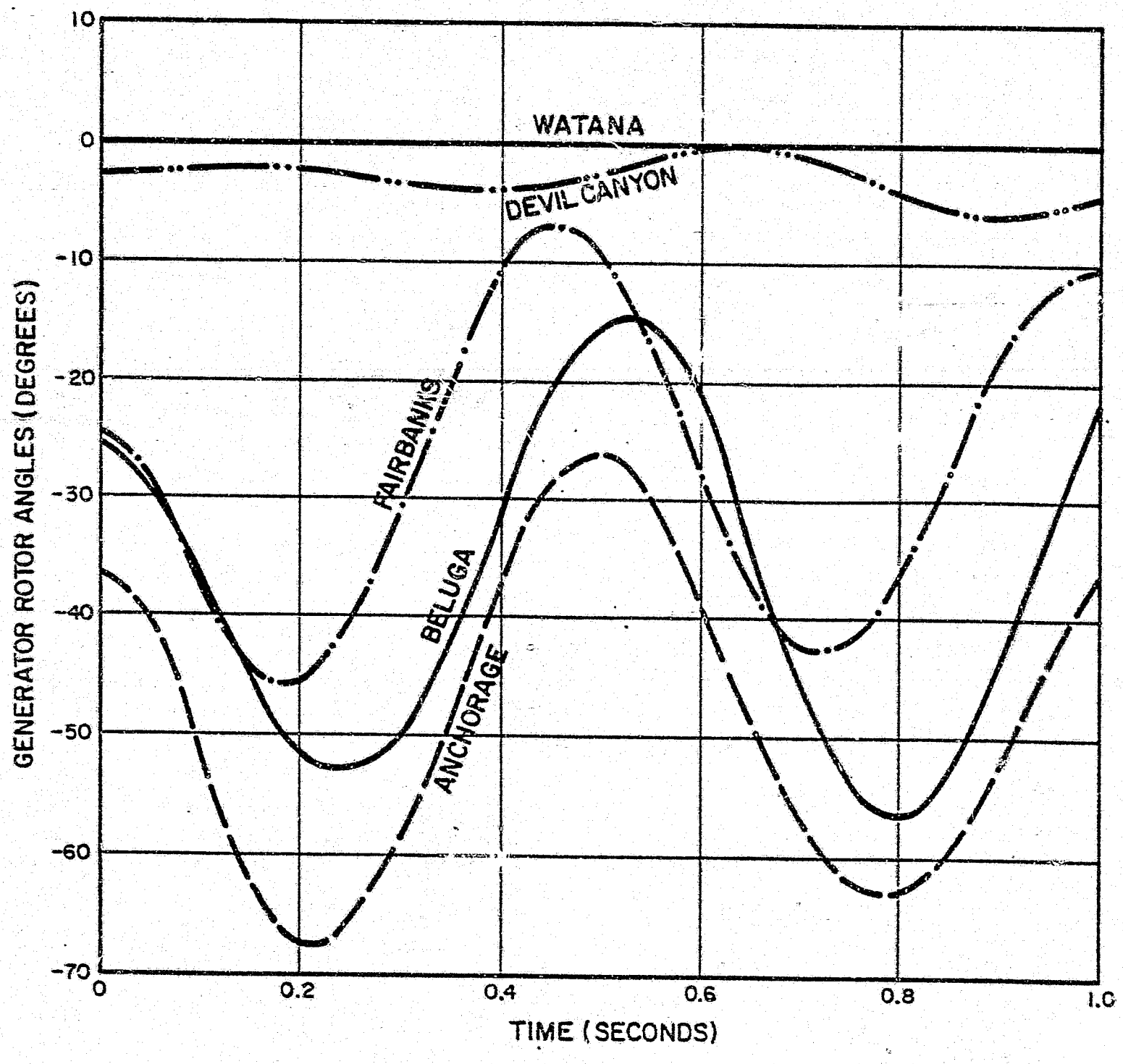

NOTE

- DISTURBANCE IS 3-PHASE FAULT AT DEVIL CANYON CLEARED IN 0.08 SECONDS BY 3-PHASE TRIPPING OF DEVIL CANYON — WILLOW LINE WITHOUT RECLOSURE
- ROTOR ANGULAR DISPLACEMENT PLOTTED IS THAT OF ALL GENERATORS RELATIVE TO WATANA

TRANSIENT STABILITY SWING CURVES – ALTERNATIVE I
85% LOAD AT ANCHORAGE

FIGURE 3.7

ACRES

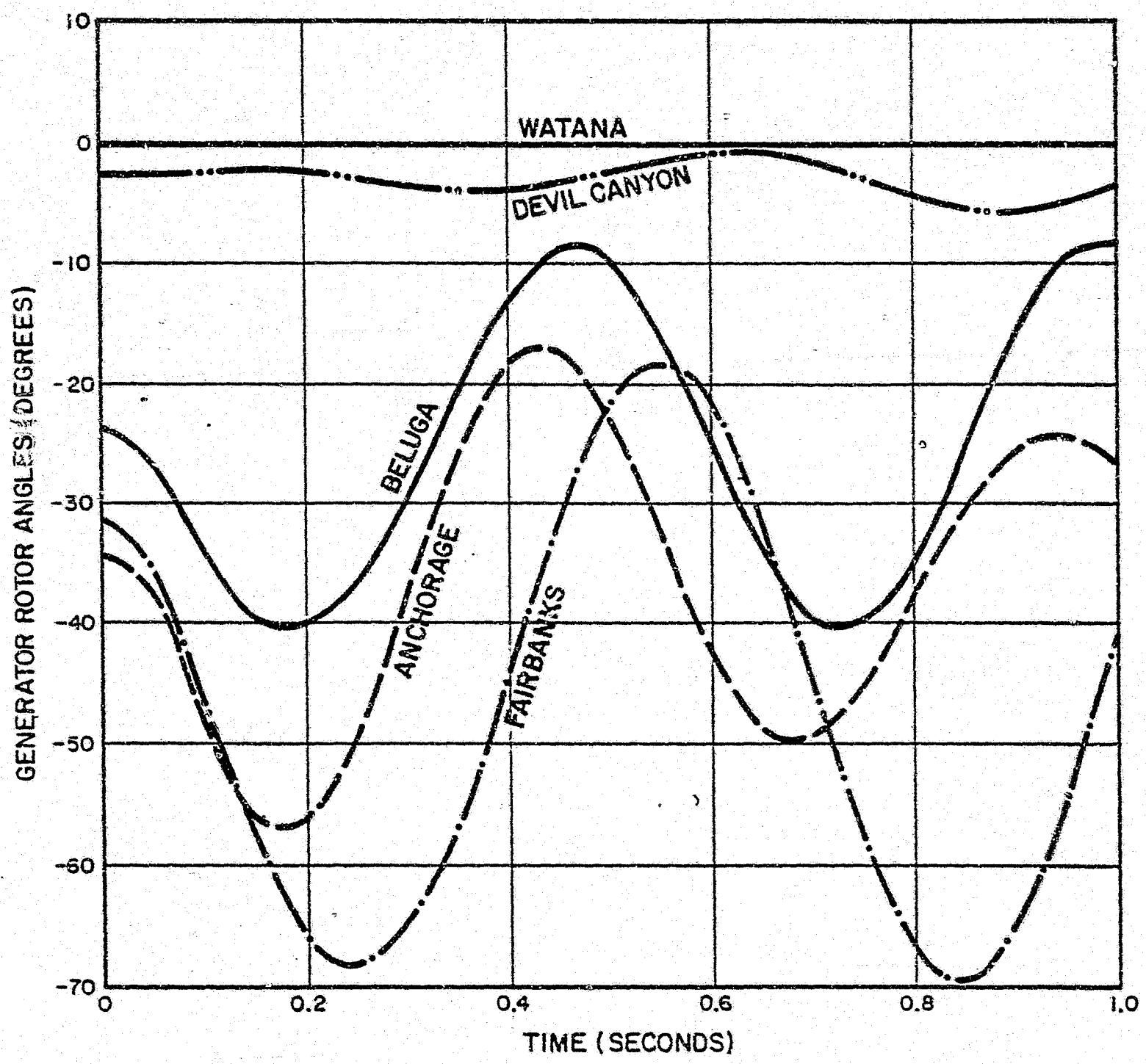

NOTE

- DISTURBANCE IS 3-PHASE FAULT AT DEVIL CANYON CLEARED IN 0.08 SECONDS BY 3-PHASE TRIPPING OF DEVIL CANYON - FAIRBANKS LINE WITHOUT RECLOSURE
- ROTOR ANGULAR DISPLACEMENT PLOTTED IS THAT OF ALL GENERATORS RELATIVE TO WATANA

TRANSIENT STABILITY SWING CURVES – ALTERNATIVE I
25% LOAD AT FAIRBANKS

FIGURE 3.8

ACRES

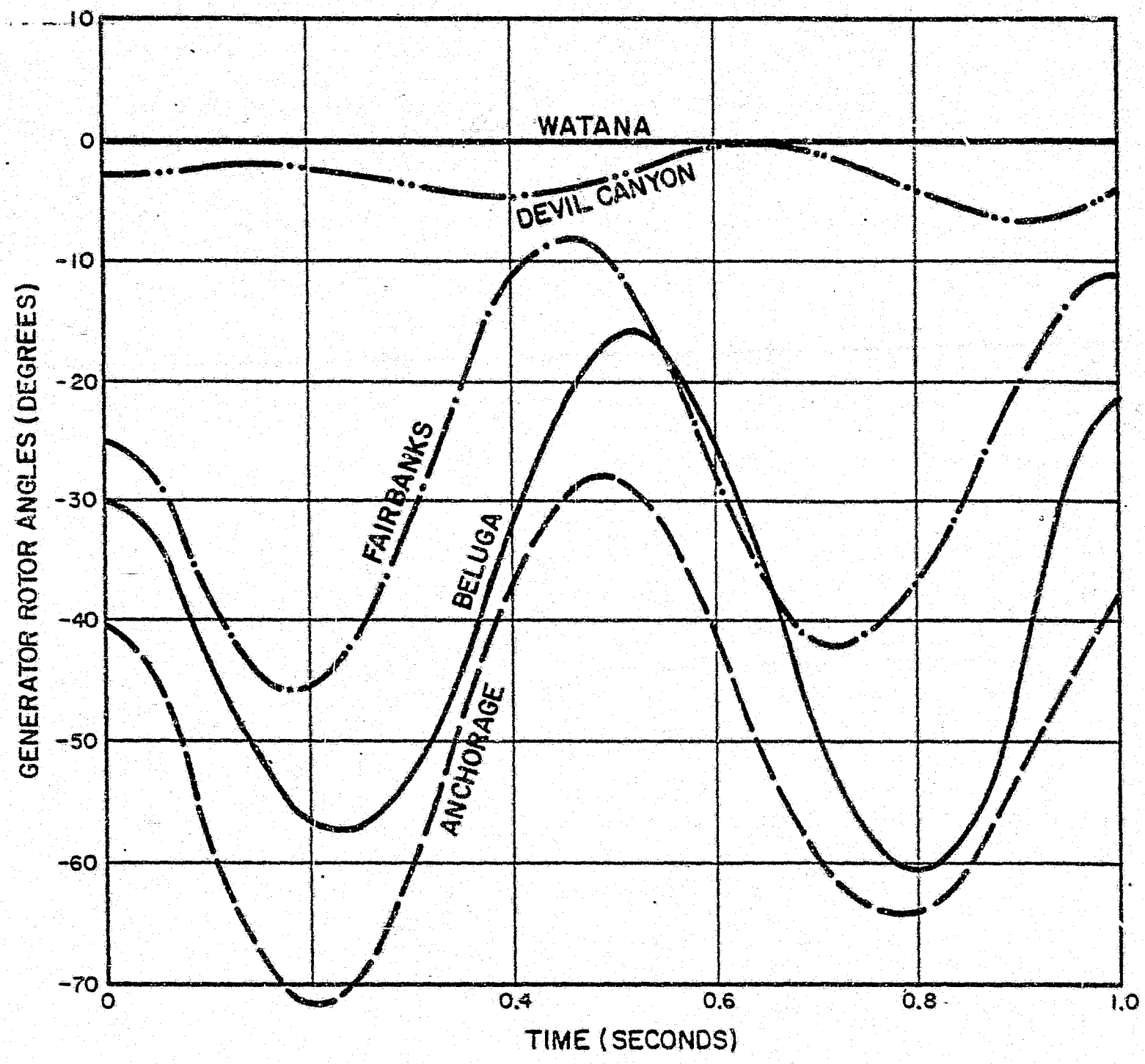

NOTE

- DISTURBANCE IS 3-PHASE FAULT AT DEVIL CANYON CLEARED IN 0.08 SECONDS BY 3-PHASE TRIPPING OF DEVIL CANYON — WILLOW LINE WITHOUT RECLOSURE
- ROTOR ANGULAR DISPLACEMENT PLOTTED IS THAT OF ALL GENERATORS RELATIVE TO WATANA

TRANSIENT STABILITY SWING CURVES — ALTERNATIVE 2
85 % LOAD AT ANCHORAGE

FIGURE 3.9

ACRES

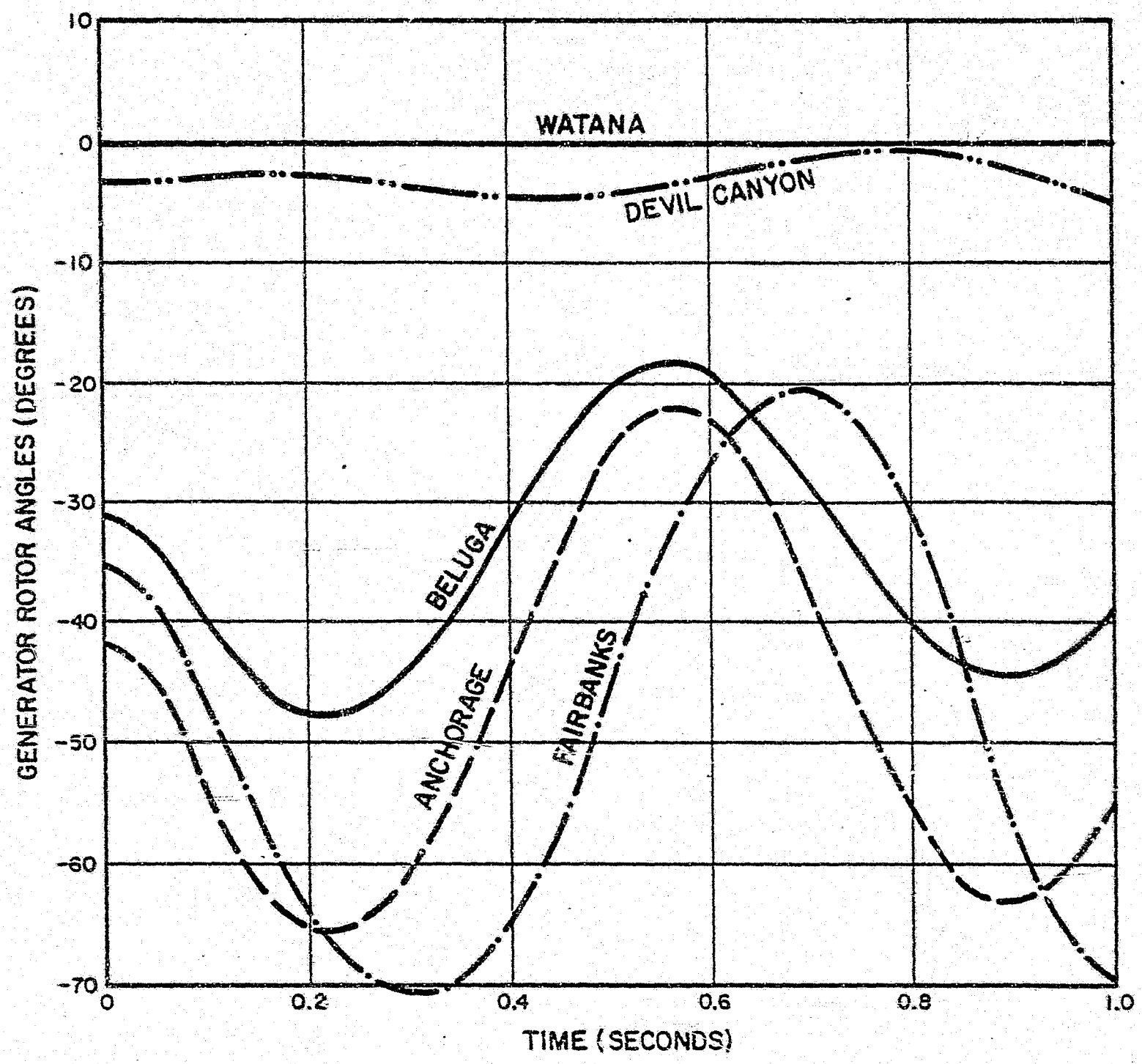

NOTE

- DISTURBANCE IS 3-PHASE FAULT AT DEVIL CANYON CLEARED IN 0.08 SECONDS BY 3-PHASE TRIPPING OF DEVIL CANYON – FAIRBANKS LINE WITHOUT RECLOSURE
- ROTOR ANGULAR DISPLACEMENT PLOTTED IS THAT OF ALL GENERATORS RELATIVE TO WATANA

TRANSIENT STABILITY SWING CURVES – ALTERNATIVE 2
25% LOAD AT FAIRBANKS

FIGURE 3.10

ACRES

4 - CONCLUSIONS

All five transmission alternatives which were developed and tested would be capable of transmitting Susitna power to Anchorage and Fairbanks with acceptable levels of reliability. All, except Alternative 5, have very similar present worth life cycle costs.

There are, however, other differences between these alternatives which have not been quantified in the above analyses. These differences, as outlined below, result in making some of the alternatives more desirable than others.

- 500-kV transmission to Anchorage has a higher ultimate capability than any other alternative, but at a significantly higher cost. Furthermore, this added capability is not required with presently foreseen installation at Susitna. This alternative also implies a dual voltage system with less possibility of standardization and reduced reliability because of the additional transformation required at Devil Canyon.

- 230-kV transmission to Fairbanks would need to be combined with a higher voltage transmission to Anchorage with the resultant disadvantages of a dual voltage system. Furthermore, it includes series compensation with additional complexity in protection and operation. Its reduced transfer capability offers no economic advantage.

- Of the 345-kV alternatives, the three-circuit configuration to Anchorage has the greatest reliability and simplicity by not requiring series compensation. It also has a higher ultimate transfer capability and a higher capability with single contingency outage, thus allowing for greater flexibility of capacity planning for Susitna. It also has partial transfer capability in the case of the double contingency outage of parallel circuit elements.

- On the other hand, the three-circuit configuration results in a slightly greater visual impact than the two-circuit alternative.

Considering the overall balance of economy, reliability, transfer capability and operational complexity, the three-circuit configuration of Alternative 2 is seen to offer the best combination of advantages.

It is recognized that, in view of the uncertainties regarding some of the system parameters, several sweeping assumptions had to be made to be able to carry out this preliminary analysis. The most obvious of these uncertainties involves the interconnection configuration between the Susitna transmission and the high-voltage transmission system in the Anchorage area. Installed capacities and generating unit sizes, as well as other technical characteristics of the Susitna project, are likely to be revised as well. However, it is expected that the conclusions drawn from both the technical and economic analyses will not be significantly affected by the resulting changes in system parameters.

5 - RECOMMENDATIONS

The following recommendations result from the preceding analysis.

(a) Recommended transmission alternative

- Watana to Devil Canyon - 2 circuits at 345 kV with 2x954 kcmil conductors

- Devil Canyon to Anchorage - 3 circuits at 345 kV with 2x954 kcmil conductors

- Devil Canyon to Fairbanks - 2 circuits at 345 kV with 2x795 kcmil conductors

All without series compensation.

(b) Before proceeding with the final feasibility analysis, it is recommended to await revisions and more definitive decisions and values for the following parameters.

(i) Ultimate installed capacity at Susitna.

(ii) Generating unit sizes at Susitna.

(iii) Number and location of points of delivery for Susitna power to the Anchorage area.

(iv) Details of generation planning, resulting in thermal development at Beluga or elsewhere.

(c) At a future date, it is recommended to analyze the possible advantage of standardization by constructing all of the Susitna transmission to Fairbanks with 2x954 kcmil conductors. The first circuit is expected to be built with this conductor between Willow and Healy as part of the Anchorage-Fairbanks transmission intertie.

APPENDIX A

TRANSMISSION PLANNING CRITERIA

APPENDIX A

TRANSMISSION PLANNING CRITERIA

In general, transmission facilities are planned so that the single contingency outage of any line or transformer element will not result in restrictions in the rated power transfer, although voltages may be temporarily outside of normal limits. The proposed guidelines concerning power transfer capability, stability, system performance limits, and thermal overloads are detailed below.

(a) Transmission System Transfer Capability

The transmission system will be designed to be capable of transmitting the maximum generating capability of the Susitna Hydroelectric Project with the single contingency outage of any line or transformer element. The sharing of load between the Anchorage and Fairbanks areas is approximately 80 and 20 percent respectively. To account for the uncertainty in future development, the transmission system shall allow for this load sharing to vary from a maximum of 85 percent at Anchorage to a maximum of 25 percent at Fairbanks.

(b) Stability

The transmission system will be checked for transient stability at critical stages of development. The system is to be designed for high speed reclosing following single-phase faults that are cleared by single-pole switching. In the case of multiphase faults, delayed reclosing is assumed.

The design fault for transient stability analysis will be a 3-phase fault cleared in 80 ms (4.8 cycles) by the local breaker and 100 ms (6.0 cycles) by the remote breaker, with no reclosing.

(Note: At later stages of design it may be useful to check dynamic stability for unsuccessful reclosure of an SLG fault cleared eventually by 3-phase trip and lock-out following initial single-pole trip. For the present, a 3-phase design fault is considered to be equivalent in terms of severity.)

(c) <u>System Energizing</u>

Line energizing initially and as part of routine switching operations will generate some dynamic overvoltages. System design should be arranged to keep these overvoltages within the following limits.

- Line open-end voltages at the remote end should not exceed 1.10 per unit on line energizing.

- Following line energizing, switching of transformers and var control devices at the receiving end should bring the voltage down to 1.05 per unit or lower.

- Initial voltages at the energizing end should not be reduced below 0.90 per unit.

- Final voltages at the energizing end should not exceed 1.05 per unit.

- The step change in voltage at the energizing end of the line should not exceed the following values

(i) 15 percent with only one generating unit operating at Watana (to represent a temporary condition during the early stage of commissioning of the Susitna project)

(ii) 10 percent with two units operating at Watana (to represent a slightly longer-term condition early in the development of Susitna)

(iii) 5 percent with 800 MW of generating capacity operating at Susitna.

(d) Load Flow

System load flows will be checked at critical stages of development to ensure that the system configuration and component ratings are adequate for normal and emergency operating conditions. The load levels to be checked will include peak load and minimum load (assumed 50 percent of peak) to ensure that system flows and voltages are within the limits specified below.

- Normal system flows must be within all normal thermal limits for transformers and lines, and should give bus voltages on the EHV system within +5 percent, -10 percent, and at subtransmission buses within +5 percent, -5 percent.

- Emergency system flows with the loss of one system element must be within emergency thermal limits for lines and transformers (20 percent O/L). Bus voltages on the EHV system should be within +5 percent, -10 percent, and at subtransmission buses within +5 percent, -10 percent.

(e) Corrective Measures

Where limiting performance criteria are exceeded, system design modifications will be applied that are considered to be most cost effective. Where conditions of low voltage are encountered, for example, power factor improvement would be tried. Where voltage variations exceed the range of normal corrective transformer tap change, supplementary var generation and control would be applied. Where circuit and transformer thermal limits are about to be exceeded, additional elements would be scheduled.

(f) Power Delivery Points

For study purposes, it will be assumed that when Susitna generation is fully developed (i.e. to approximately 1,500 MW, the total output will be delivered to terminal stations as follows.

- Fairbanks - one station at Gold Hill with transformation from EHV to 138 kV.

- Anchorage - one or two stations with transformation from EHV to 230 kV or 138 kV.

The provision of intermediate switching stations along the route may prove to be economic and essential for stability and operating flexibility. Utilization of these switching stations for the supply of local load will be examined, but security of supply to Anchorage and Fairbanks will be given priority consideration.

APPENDIX B

EXISTING TRANSMISSION SYSTEM DATA

TABLE OF CONTENTS

LIST OF TABLES

LIST OF FIGURES

TABLE B1.1: ANCHORAGE MUNICIPAL LIGHT AND POWER
EXISTING GENERATING CAPACITY

Unit	Year of Installation	Type	Capacity* (MW)	Remarks
Station 1 - Unit 1		GT	16.25	Natural gas
Station 1 - Unit 2		GT	16.25	Natural gas
Station 1 - Unit 3		GT	19.50	Natural gas
Station 1 - Unit 4		GT	37.50	Natural gas
Station 1 - D1		Diesel	1.10	Black start units
Station 1 - D5		Diesel	1.10	Black start units
Station 2 - Unit 5		GT		Natural gas,
Station 2 - Unit 6		ST	138.90	combined cycle, base
Station 2 - Unit 7		GT		load
Total available capacity			230.60	

*Peak rating at 0°F.

Abbreviations: GT - Gas Turbine
ST - Steam Turbine

TABLE B1.2: ANCHORAGE MUNICIPAL LIGHT AND POWER GENERATOR DATA

Unit	Voltage (kV)	Rating (MVA)	Power Factor	Generator Impedance* X_d	X'_d	X''_d	X_2	X_o	Inertia Constant**
Station 1 - Unit 1	13.8	15.6	.85	11.54	2.44	1.60	1.60		1.64
Station 1 - Unit 2	13.8	15.6	.85	11.54	2.44	1.60	1.60		1.64
Station 1 - Unit 3	13.8	19.2	.85	14.43	2.43	1.60	1.61		1.94
Station 1 - Unit 4	13.8	31.765	.85	5.68	.72	.41	.41	.14	2.89
Station 1 - D1		1.1	1.0	104.55	29.09	20.00	21.82		
Station 1 - D5		1.1	1.0	104.55	29.09	20.00	21.82		
Station 2 - Unit 5	13.8	39.2		5.22	.70	.41			3.88
Station 2 - Unit 6	13.8	38.8		4.12	.57	.28			1.63
Station 2 - Unit 7	13.2	110.5		2.25	.34	.24			8.40

* Impedance in per unit on 100 MVA base.
**Inertia constant in per unit on 100 MVA base.

TABLE B1.3: ANCHORAGE MUNICIPAL LIGHT AND POWER
TRANSMISSION LINE DATA
EXISTING AND PLANNED FACILITIES

Transmission Circuit - Voltage From Bus - To Bus	Length (mi)	Conductor	Pos Seq Impedance* R	Pos Seq Impedance* X	Susceptance** BC	Zero Seq Impedance*** R_o	Zero Seq Impedance*** X_o
Station 1 - Station 2 115 kV (via Ft. Richardson-Elmendorf AFB)†							
Station 1 - Station 2	5.5	397 ACSR (26/7)	.01134	.03087	.00456		
Station 2 - APA Tap 115 kV							
Station 2 - APA Tap	.6	397 ACSR (26/7)	.00124	.00338	.00050		
Station 1 - Anchorage (APA) 115 kV (Approximate in-service date 1982)††							
Station 1 - Station 6	1.7	397 ACSR (26/7)	.00356	.00973	.00144		
Station 6 - Station 11 Tap	1.8	397 ACSR (26/7)	.00377	.01030	.00152		
Station 11 Tap - Station 16	.8	397 ACSR (26/7)	.00156	.00427	.00063		
Station 16 - Station 15	3.1	397 ACSR (26/7)	.00634	.01733	.00256		
Station 15 - Anchorage (APA)	.1	397 ACSR (26/7)	.00025	.00068	.00010		
Total	7.5						
Station 11 - Station 11 Tap	3.0	397 ACSR (26/7)	.00613	.01680	.00248		
Station 1 - Station 2 (APA) 115 kV (Approximate in-service date 1982)††							
Station 1 - Station 14	1.6	397 ACSR (26/7)	.00336	.00918	.00135		
Station 14 - Station 17 Tap	.9	397 ACSR (26/7)	.00187	.00512	.00076		
Station 17 Tap - Station 2	3.0	397 ACSR (26/7)	.00630	.01712	.00253		
Total Station 1 - Station 2	5.5						
Station 17 Tap - Station 17†††	1.0	397 ACSR (26/7)	.00210	.00574	.00085		
Station 17 - Anchorage (APA)	.8	397 ACSR (26/7)	.00165	.00450	.00066		
Total	1.8						

* Positive sequence impedance in per unit on 100 MVA base.
** Total line charging susceptance in per unit on 100 MVA base.
***Zero sequence impedance in per unit on 100 MVA base.
† Normally no power exchange to military system.
†† Rebuild and conversion of existing 34.5-kV circuit to 115 kV.
†††Station 17 is scheduled for installation in 1985. Station 17 - Station 17 Tap will be operated normally open.

TABLE B1.4: ANCHORAGE MUNICIPAL LIGHT AND POWER TRANSFORMER DATA

Substation - Transformer	Voltage (kV)	Rating (MVA)	Tap Setting	Tap Range	Reactance*
Two Winding Transformers					
Station 1 - 1	115/34.5	28/37/46			.2893
Station 1 - 2	115/34.5	28/37/46			.2893
Station 1 - GSU 1	13.8/34.5	12			.5833
Station 1 - GSU 2	13.8/34.5	12			.5833
Station 1 - GSU 3	13.8/34.5	12			.5000
Station 1 - GSU 4	13.8/34.5	21/25/28			.2810
Station 1 - GSU Diesel	2.4/33	3.75			2.0373
Station 2 - GSU 5	13.8/115	30/40/50			.2233
Station 2 - GSU 6	13.8/115	30/40/50			.2267
Station 2 - GSU 7	13.2/115	44/59/74			.1528

*Transformer reactance in per unit on 100 MVA base.

TABLE B1.5: ANCHORAGE MUNICIPAL LIGHT AND POWER DISTRIBUTION SUBSTATION DATA EXISTING AND PLANNED FACILITIES

Substation	Voltage (kV)	Load*** (percent)
Central business district*	34.5/4.2	31
12 kV substations**	115/12.5	69
Total		100

* The central business district is supplied from generating Station 1 34.5-kV bus via a number of 34.5/4.2-kV substations.

** Stations 6, 11, 14, 15, 16 and 17 are 115/12.5-kV substations. Substation 17 is scheduled for installation in 1985. The 12-kV load is equally divided among the 12-kV substations.

***The percentage of load supplied at 34.5 and 12.5 kV is expected to remain constant.

TABLE B1.6: ANCHORAGE MUNICIPAL LIGHT AND POWER
HISTORICAL SYSTEM PEAK DEMANDS

Winter	Peak Demand (MW)
1974/1975	82.8
1975/1976	89.5
1976/1977	93.4
1977/1978	101.5
1978/1979	109.0
1979/1980	111.5

TABLE B2.1: CHUGACH ELECTRIC ASSOCIATION, INC.
EXISTING AND PLANNED GENERATING CAPACITY

Unit	Year of Installation	Type	Capacity (MW)	Remarks
Beluga - Unit 1		GT	16.5	Base load
Beluga - Unit 2		GT	16.5	Base load
Beluga - Unit 3		GT	54.6	Base load
Beluga - Unit 4		GT	9.3	Jet engine
Beluga - Unit 5		GT	65.5	Base load
Beluga - Unit 6		GT	67.8	Combined cycle - base load
Beluga - Unit 7		GT	68.0	
Beluga - Unit 8	1982	ST	62.0	
Bernice Lake - Unit 1		GT	8.85	
Bernice Lake - Unit 2		GT	18.95	Base load
Bernice Lake - Unit 3		GT	29.60	Base load
Cooper Lake - Unit 1		Hydro	7.5	
Cooper Lake - Unit 2		Hydro	7.5	
International - Unit 1		GT	14.0	
International - Unit 2		GT	14.0	
International - Unit 3		GT	18.58	
Knik Arm - TG5		ST	3.0	
Knik Arm - TG6		ST	3.0	
Knik Arm - TG7		ST	3.0	
Knik Arm - TG8		ST	5.0	
Total available capacity			493.18	

Abbreviations: GT - Gas Turbine
ST - Steam Turbine

TABLE B2.2: CHUGACH ELECTRIC ASSOCIATION, INC.
GENERATOR DATA

Unit	Voltage (kV)	Rating (MVA)	Power Factor	Generator Impedance* X_d	X'_d	X''_d	X_2	X_o	Inertia Constant**
Beluga - Unit 1	13.8	18.824	.90		1.59	.58			
Beluga - Unit 2	13.8	18.824	.90		1.59	.58			
Beluga - Unit 3	13.8	57.0	.95	2.87	.28	.18			
Beluga - Unit 4	13.8	10.0	.90						
Beluga - Unit 5	13.8	68.889	.95	2.87	.28	.19			
Beluga - Unit 6	13.8	85.0	.80	2.54	.33	.21			
Beluga - Unit 7	13.8	85.0	.80	2.54	.33	.21			
Beluga - Unit 8	13.8	68.889	.90	2.44	.23	.16			
Bernice Lake - Unit 1	24.9	9.375	.95	16.00	3.73	2.13			.34
Bernice Lake - Unit 2	13.8	20.65	.90	8.96	.82	.53			1.86
Bernice Lake - Unit 3	13.8	29.60	1.00	6.31	.65	.43			2.19
Cooper Lake - Unit 1	39.8	8.33	.90		3.11	2.16			
Cooper Lake - Unit 2	39.8	8.33	.90		3.11	2.16			
International - Unit 1	13.8	17.647	.80	10.65	1.02	.71			
International - Unit 2	13.8	17.647	.80	10.65	1.02	.71			
International - Unit 3	13.8	19.200	.95	9.74	1.74	1.24			
Knik Arm - TG5	4.2	3.75	.80			6.00			
Knik Arm - TG6	4.2	3.75	.80			6.00			
Knik Arm - TG7	4.2	3.75	.80			6.00			
Knik Arm - TG8	4.2	6.25	.80			3.40			

*. Impedance in per unit on 100 MVA base.
**Inertia constant in per unit on 100 MVA base.

TABLE B2.3: CHUGACH ELECTRIC ASSOCIATION, INC.
TRANSMISSION LINE DATA
EXISTING AND PLANNED FACILITIES

Transmission Circuit - Voltage From Bus - To Bus	Length (mi)	Conductor	Pos Seq Impedance* R	Pos Seq Impedance* X	Susceptance** BC	Zero Seq Impedance*** R_o	Zero Seq Impedance*** X_o
Beluga - Pt MacKenzie 230 kV							
Beluga - Pt MacKenzie Ckt 1†		795 ACSR	.0094	.0627	.1216		
Beluga - Pt MacKenzie Ckt 2†		795 ACSR	.0094	.0627	.1216		
Beluga - Pt MacKenzie Ckt 3††		795 ACSR	.0094	.0627	.1216		
Pt MacKenzie - University 230 kV†††							
Pt MacKenzie - West Terminal		954 and 795 ACSR	.0016	.0108	.0220		
Submarine cable		1,000 Kcmil Cu	.0010	.0056	.0004		
East Terminal - University		954 and 795 ACSR	.0037	.0266	.0536		
Totals			.0063	.0430	.0760		
International - University 138 kV							
International - University			.0048	.0189	.0054		
International - Pt Woronzof 138 kV							
International - Pt Woronzof Ckt 1			.0038	.0151	.0538		
International - Pt Woronzof Ckt 2			.0038	.0151	.0538		
Pt MacKenzie - Teeland 138 kV							
Pt MacKenzie - Teeland		795 ACSR	.0176	.1066	.0264		
Pt MacKenzie - Pt Woronzof 138 kV							
Cables 1 to 4			.0030	.0041	.0562		
Cable 5			.0035	.0045	.1034		
Cable 6			.0035	.0045	.1034		
Cables 7 to 10			.0086	.0034	.2800		
Bernice Lake - Soldotna (HEA) 115 kV							
Bernice Lake - Soldotna			.0310	.1390	.0156		

Table B2.3: Chugach Electric Association, Inc.
Transmission Line Data
Existing and Planned Facilities - 2

Transmission Circuit - Voltage From Bus - To Bus	Length (mi)	Conductor	Pos Seq Impedance* R	Pos Seq Impedance* X	Susceptance** BC	Zero Seq Impedance*** R_o	Zero Seq Impedance*** X_o
Soldotna - Quartz Creek 115 kV							
Soldotna - Quartz Creek			.0684	0.3070	.0371		
Quartz Creek - University 115 kV							
Quartz Creek - Daves Creek			.0184	.0827	.0108		
Daves Creek - Hope			.0215	.0964	.0125		
Hope - Portage			.0250	.1124	.0146		
Portage - Girdwood			.0140	.0627	.0082		
Girdwood - Indian			.0136	.0610	.0079		
Indian - University			.0210	.0941	.0122		
Bernice Lake - Soldotna (HEA) 69 kV							
Bernice Lake - Kenai			.2300	.3250	.0051		
Kenai - Soldotna (HEA)			.0733	.1040	.0016		
Cooper Lake - Quartz Creek 69 kV							
Cooper Lake - Quartz Creek			.0218	.0863	.0015		
Homer (HEA) - Soldotna (HEA) 69 kV							
Homer (HEA) - Kasilof (HEA)							
Kasilof (HEA) - Soldotna (HEA)							
Soldotna (HEA) - Quartz Creek 69 kV							
Soldotna (HEA) - Quartz Creek			.6350	.8980	.0129		

* Positive sequence impedance in per unit on 100 MVA base.
** Total line charging susceptance in per unit on 100 MVA base.
***Zero sequence impedance in per unit on 100 MVA base.
† Existing 138-kV circuits are being reinsulated to permit operation at 230 kV, approximate in-service date - 1981.
†† A third 230-kV circuit being added, approximate in-service date - 1981.
†††Approximate in-service date - 1982.

Abbreviation: HEA - Homer Electric Association

TABLE B2.4: CHUGACH ELECTRIC ASSOCIATION, INC.
TRANSFORMER DATA
EXISTING AND PLANNED FACILITIES

Substation - Transformer	Voltage (kV)	Rating (MVA)	Tap Setting	Tap Range	Impedance* R	Impedance* X
Beluga-1**	230/138	180/240/300			.0020	.0222
Beluga-2**	230/138	180/240/300			.0020	.0222
Pt MacKenzie-1**	230/138	180/240/300			.0020	.0222
Pt MacKenzie-2**	230/138	180/240/300			.0020	.0222
University**	230/138	180/240/300			.0020	.0222
Teeland	138/115	45/60/75				.1805
University-1	138/115/34.5	45/60/75		(Z_H=-j.0245, Z_L=j.2045, Z_T=j.1712)		
University-2	138/115/34.5	45/60/75		(Z_H=j.0276, Z_L=-j.0036, Z_T=j.1194)		
International-1	138/34.5	125			.0073	.0880
International-2	138/34.5	125			.0073	.0880
Bernice Lake	115/69	33.6/44.8/56				.2972
Soldotna (HEA)	115/69	32.6				.1333
Quartz Creek	115/69	12/15				.3420
Beluga-GSU 1	13.8/138	16			.0450	.6780
Beluga-GSU 2	13.8/138	16			.0440	.6640
Beluga-GSU 3	13.8/138	48.8/65/81.3			.0110	.1600
Beluga-GSU 4	13.8/138	12/16			.0450	.6780
Beluga-GSU 5	13.8/138	45/60/75			.0140	.2040
Beluga-GSU 6	13.8/138	48.8/65/81.3			.0140	.1650
Beluga-GSU 7	13.8/138	45/64/80				
Beluga-GSU 8	13.8/138					
Bernice Lake-GSU 1	24.9/69	5			.009	1.3600
Bernice Lake-GSU 2	13.8/69	23			.043	.5170
Bernice Lake-GSU 3	13.8/69	20.4/27.2/34				.3889
Cooper Lake-GSU	39.8/69	20			.0310	.4600
International-GSU 1	13.8/34.5	12/16				.5000
International-GSU 2	13.8/34.5	11.25/15				.5510
International- GSU 3	13.8/34.5	12/16/20				.5000
Knik Arm-1	4.2/34.5	5				1.2200
Knik Arm-2	4.2/34.5	5				1.2200
Knik Arm-GSU 8	4.2/34.5	6.25				.9600

* Transformer impedance in per unit on 100 MVA base.
**Approximate in-service date 1981 to 1982.

Abbreviations: HEA - Homer Electric Association

TABLE B2.5: CHUGACH ELECTRIC ASSOCIATION, INC.
DISTRIBUTION SUBSTATION DATA
EXISTING SYSTEM

Substation	Transformer Voltage (kV)	Transformer Rating (MVA)	Percent of Total
Anchorage Area			
Supplied via International Substation at 34.5 kV			
Arctic	34.5/12.5	14.0	
Blueberry	34.5/12.5	14.0	
Campbell	34.5/12.5	14.0	
Jewel Lake	34.5/12.5	11.2	
Klatt	34.5/12.5	14.0	
Sand Lake	34.5/12.5	14.0	
Spenard	34.5/12.5	10.0	
Tudor	34.5/12.5	14.0	
Turnagain	34.5/12.5	5.0	
Woodland Park	34.5/12.5	21.0*	
International Subtotal		131.2	46
Supplied via University Substation at 34.5 kV			
Boniface	34.5/12.5	14.0	
DeBarr	34.5/12.5	25.2*	
Fairview	34.5/12.5	3.8	
Huffman	34.5/12.5	17.8*	
Mt View	34.5/12.5	12.0*	
O'Malley	34.5/12.5	14.0	
University Subtotal		86.8	30
Supplied via Beluga Substation			
Tyonek	24.9/12.5	3.8	
Tyonek Timber	24.9/12.5	8.4	
Beluga Subtotal		12.2	4

Table B2.5: Chugach Electric Association, Inc.
Distribution Substation Data
Existing System - 2

Substation	Transformer Voltage (kV)	Transformer Rating (MVA)	Percent of Total
Kenai Peninsula			
Daves Creek	115/24.9	14.0	
Girdwood	115/24.9	11.2	
Homer	69/24.9/12.5	3.8	
Hope	115/24.9	3.8	
Indian	115/24.9	2.3	
Kasilof	69/24.9	3.8	
Kenai	69/33	7.5	
Portage	115/12.5	2.8	
Soldotna	69/24.9	7.5	
Kenai Peninsula Subtotal		56.7	20
TOTALS		286.9	100

*Total MVA capacity of two transformers.

TABLE B3.1: FAIRBANKS MUNICIPAL UTILITY SYSTEM
EXISTING GENERATING CAPACITY

Unit	Year of Installation	Type	Nameplate Capacity (MW)	Remarks
Chena 1	1954	ST	5.00	Coal
Chena 2	1952	ST	2.00	Coal
Chena 3	1952	ST	1.50	Coal
Diesel D1	1967	Diesel	2.75	
Diesel D2	1968	Diesel	2.75	
Diesel D3	1968	Diesel	2.75	
Gas Turbine 4	1963	GT	5.25	Oil
Chena 5	1970	ST	20.00	Coal - Base load and district heating
Chena 6	1976	GT	23.10	Oil
Total Available Capacity			65.10	

TABLE B3.2: FAIRBANKS MUNICIPAL UTILITY SYSTEM
GENERATOR DATA

Unit	Voltage (kV)	Rating (MVA)	Power Factor	Generator Impedance* X_d	X'_d	X''_d	X_2	X_o	Inertia Constant**
Chena 1	4.2	6.25	.85	23.36	2.50	1.47			
Chena 2	4.2	2.40	.85	55.00	7.88	4.13			
Chena 3	4.2	1.80	.85	75.00	12.33	6.39			
Diesel 1	12.5	3.44	.80		6.63	4.54			
Diesel 2	12.5	3.44	.80		6.63	4.54			
Diesel 3	12.5	3.44	.80		6.63	4.54			
Gas turbine 4	12.5	6.25	.80		6.24	3.68			
Chena 5	12.5	25.10	.85		1.08	.66			
Chena 6	12.5	29.00	.85			.73			

* Impedance in per unit on 100 MVA base.
**Inertia constant in per unit on 100 MVA base.

TABLE B3.3: FAIRBANKS MUNICIPAL UTILITY SYSTEM
TRANSMISSION LINE DATA
EXISTING AND PLANNED FACILITIES

Transmission Circuit - Voltage From Bus - To Bus	Length (mi)	Conductor	Pos Seq Impedance* R	Pos Seq Impedance* X	Susceptance** BC	Zero Seq Impedance*** R_o	Zero Seq Impedance*** X_o
Chena - Zehnder (GVEA) 69 kV Interconnection†							
Chena - Zehnder	.8	336 ACSR (26/7)	.0047	.0120	.0002	.0095	.0472
Chena - South Fairbanks 69 kV (Approximate in-service date 1982††							
Chena - South Fairbanks	3.0	336 ACSR (26/7)	.0175	.0451	.0006	.0355	.1770

* Positive sequence impedance in per unit on 100 MVA base.
** Total line charging susceptance in per unit on 100 MVA base.
***Zero sequence impedance in per unit on 100 MVA base.
† Metered at Zehnder.
†† Estimated date.

TABLE B3.4: FAIRBANKS MUNICIPAL UTILITY SYSTEM
TRANSFORMER DATA
EXISTING AND PLANNED FACILITIES

Substation - Transformer	Voltage (kV)	Rating* (MVA)	Tap Setting	Tap Range	Reactance**
Two Winding Transformer					
Chena - 1	69/12.47	12/16/20	LTC		.6250
Chena - 2 (1982)***	69/12.47	12/16/20	LTC		.6250
South Fairbanks (1982)***	69/12.47	12/16/20	LTC		.6250

* Continuous full load rating at 65°C rise.
** Transformer reactance in per unit on 100 MVA base.
***Approximate in-service date.

Abbreviation: LTC - Load Tap Changing

TABLE B3.5: FAIRBANKS MUNICIPAL UTILITY SYSTEM
HISTORICAL LOAD DATA

Substation	Voltage (kV)	Historical Peak Demands (MW)*					
		1975	1976	1977	1978	1979	1980**
Chena	12.47 and 4.16	27.2	25.0	27.6	24.1	25.3	25.2

* Historical load power factor - .95
**1980 maximum demand through June 1980.

TABLE B4.1: GOLDEN VALLEY ELECTRIC ASSOCIATION, INC.
EXISTING GENERATING CAPACITY

Unit	Year of Installation	Type	Capacity (MW)	Remarks
Healy - S1	1967	ST	25.00	Coal base load unit
Healy - D1		Diesel	2.75	Peaking unit
North Pole - GT1	1976	GT	60.50	
North Pole - GT2	1977	GT	60.50	
Zehnder - GT1	1971	GT	18.40	
Zehnder - GT2	1972		18.40	
Zehnder - GT3	1975	GT	2.80*	
Zehnder - GT4	1975	GT	2.80*	
Zehnder - D		Diesel	2.28*	
Zehnder - D		Diesel	2.28*	
Zehnder - 4 units		Diesel	10.64**	Peaking units
Total Available Capacity			206.35	

* Capacity at estimated power factor -.80.
**Combined capacity of 4 units.

Abbreviations: ST - Steam Turbine
GT - Gas Turbine

TABLE B4.2: GOLDEN VALLEY ELECTRIC ASSOCIATION, INC.
GENERATOR DATA

Unit	Voltage (kV)	Rating (MVA)	Power Factor	Generator Impedance* X_d	X'_d	X''_d	X_2	X_0	Inertia Constant**
Healy - S1	13.8	29.4	.85	6.086	.731	5.10	.510	.170	.88
Healy - D1	2.4	3.5	.80	23.190	8.700	5.220	5.507	1.449	
North Pole - GT1	13.8	71.9	.90	2.866	.285	.185	.177	.107	5.62
North Pole - GT2	13.8	71.9	.90	2.932	.284	.185	.172	.104	5.62
Zehnder - GT1	13.8	20.7	.85	8.959	.823	.533	.484	.315	1.86
Zehnder - GT2	13.8	20.7	.85	8.959	.823	.533	.484	.315	1.86
Zehnder - GT3	4.2	3.5	.80	32.86	4.29	2.86	3.71	1.14	
Zehbder - GT4	4.2	3.5	.80	32.86	4.29	2.86	3.71	1.14	
Zehnder - D	4.2	2.9	.80	63.86	16.84	11.23	8.42	4.21	
Zehnder - D	4.2	2.9	.80	63.86	16.84	11.23	8.42	4.21	
Zehnder - 4 Units	4.2	3.3	.80	24.02	9.00	5.40	5.70	1.50	

* Impedance in per unit on 100 MVA base.
**Inertia constant in per unit on 100 MVA base.

TABLE B4.3: GOLDEN VALLEY ELECTRIC ASSOCIATION, INC.
TRANSMISSION LINE DATA
EXISTING SYSTEM

Transmission Circuit - Voltage From Bus - To Bus	Length (mi)	Conductor	Pos Seq Impedance* R	Pos Seq Impedance* X	Susceptance** BC	Zero Seq Impedance*** R_o	Zero Seq Impedance*** X_o
Healy - Gold Hill 138 kV							
Gold Hill - Nenana	47.0	556 ACSR (26/7)	.0415	.1963	.0475	.1120	.6311
Nenana - Healy	56.2	556 ACSR (26/7)	.0496	.2349	.0569	.1341	.7552
Total	103.2						
North Pole - Fort Wainwright 138 kV							
Fort Wainwright - North Pole	12.3	795 ACSR (26/7)	.0075	.0489	.0130	.0259	.1650
North Pole - Highway Park 69 kV							
Highway Park - North Pole	2.3	795 ACSR (2/17)	.0057	.0321	.0007	.0195	.1331
Zehnder - Fort Wainwright 69 kV							
Fort Wainwright - Hamilton Acres	2.9	4/0 ACSR (6/1)	.0269	.0478	.0008	.0442	.1743
Zehnder - Fox 69 kV							
Fox - Steese	5.7	336 ACSR (26/7)	.0330	.0826	.0016	.0669	.3381
Steese - Zehnder	2.4	336 ACSR (26/7)	.0141	.0352	.0007	.0285	.1442
Total	8.1						
Zehnder - Gold Hill Double Circuit 69 kV (Z mutual = .0060 + j.0431 per mile)							
Gold Hill - Musk Ox Tap	.8	336 ACSR (26/7)	.0046	.0114	.0002	.0092	.0466
Musk Ox Tap - U of Ak	3.5	336 ACSR (26/7)	.0203	.0510	.0010	.0412	.2080
University of AK - University Ave	.3	336 ACSR (26/7)	.0018	.0044	.0001	.0036	.0179
University Ave - Zehnder	2.6	336 ACSR (26/7)	.0153	.0384	.0008	.0310	.1566
Total	7.2						
Musk Ox - Musk Ox Tap	5.3	336 ACSR (26/7)	.0309	.0798	.0015	.0628	.3126
Gold Hill - Chena Pump Tap	2.1	336 ACSR (26/7)	.0121	.0303	.0006	.0245	.1237
Chena Pump Tap - Airport Tap	1.5	336 ACSR (26/7)	.0091	.0227	.0004	.0184	.0926
Airport Tap - Zehnder	3.6	336 ACSR (26/7)	.0208	.0522	.0010	.0422	.2128
Total	7.2						

Table B4.3: Golden Valley Electric Association, Inc.
Transmission Line Data
Existing System - 2

Transmission Circuit - Voltage From Bus - To Bus	Length (mi)	Conductor	Pos Seq Impedance* R	Pos Seq Impedance* X	Susceptance** BC	Zero Seq Impedance*** R_o	Zero Seq Impedance*** X_o
Chena Pump - Chena Pump Tap	.4	336 ACSR (26/7)	.0023	.0061	.0001	.0047	.0234
International Airport - Airport tap	1.5	336 ACSR (26/7)	.0088	.0226	.0004	.0178	.0885
Fort Wainwright - Highway Park 69 kV							
Fort Wainwright - Fort W Gen	.5	4/0 ACSR (6/1)	.0047	.0083	.0001	.0077	.0303
Fort W Gen - Badger Tap	6.7	4/0 ACSR (6/1)	.0622	.1103	.0018	.1021	.4024
Badger Tap - Brockman Tap	2.3	4/0 ACSR (6/1)	.0213	.0378	.0006	.0350	.1380
Badger Tap - Highway Park	3.0	4/0 ACSR (6/1)	.0280	.0497	.0008	.0461	.1815
Total	12.5						
Badger Road - Badger Tap	1.0	4/0 ACSR (6/1)	.0093	.0164	.0003	.0152	.0599
Brockman - Brockman Tap	6.3	336 ACSR (26/7)	.0368	.0948	.0012	.0746	.3716
Fort Wainwright - Peger Road 69 kV							
Fort Wainwright - S Fairbanks	1.2	336 ACSR (26/7)	.0070	.0181	.0003	.0142	.0708
S Fairbanks - Peger Road	3.2	336 ACSR (26/7)	.0185	.0476	.0009	.0374	.1864
Total	4.4						
Highway Park - Jarvis Creek 69 kV							
Highway Park - Newby Road (future)	4.0	4/0 ACSR (6/1)	.0374	.0663	.0011	.0614	.2420
Newby Road (future) - Eielson AFB	9.4	4/0 ACSR (6/1)	.0874	.1551	.0025	.1436	.5658
Eielson AFB - Johnson Road	9.5	4/0 ACSR (6/1)	.0888	.1575	.0026	.1459	.5749
Johnson Road - Carney (future)	6.5	336 ACSR (26/7)	.0380	.0978	.0018	.0770	.3834
Carney (future) - Jarvis Ck††	52.6	556 ACSR (26/7)	.1856	.8624	.0136	.5016	2.8579
Total	82.0						

* Positive sequence impedance in per unit on 100 MVA base.
** Total line charging susceptance in per unit on 100 MVA base.
***Zero sequence impedance in per unit on 100 MVA base.
† Estimated data.
†† Carney (future)-Jarvis Creek is constructed to 138-kV standards.
†††Carney (future)-Jarvis Creek is converted to 138-kV operation.

TABLE B4.4: GOLDEN VALLEY ELECTRIC ASSOCIATION, INC.
TRANSMISSION LINE DATA
PLANNED FACILITIES†

Transmission Circuit - Voltage From Bus - To Bus	Length (mi)	Conductor	Pos Seq Impedance* R	Pos Seq Impedance* X	Susceptance** BC	Zero Seq Impedance*** R_o	Zero Seq Impedance*** X_o
Peger Road - International Airport 69 kV (Approximate in-service date - 1981)							
International Airport - Peger Road	3	336 ACSR (26/7)					
North Pole - Gold Hill 138 kV (Approximate in-service date - 1984)							
Gold Hill - North Pole-OH	21	556 ACSR (26/7)	.0192	.0902	.0326		
-UG	1						
Total	22						
North Pole - Jarvis Creek 138 kV (Approximate in-service date - 1984)							
North Pole - Carney	20	556 ACSR (26/7)	.0175	.0820	.0206		
Carney - Jarvis CK†††	52.6	556 ACSR (26/7)	.0464	.2156	.0542	.1254	.7145
Total	72.6						
Bently - Fort Wainwright 138 kV (Approximate in-service date - 1992)							
Bently - Fort Wainwright	16.2	795 ACSR (26/7)					
Bently - Gold Hill 138 kV (Approximate in-service date - 1992)							
Bently - Gold Hill	9.5	795 ACSR (26/7)					

* Positive sequence impedance in per unit on 100-MVA base.
** Total line charging sysceptance in per unit on 100-MVA base.
***Zero sequence impedance in per unit on 100-MVA base.
† Estimated data.
†† Carney (future)-Jarvis Creek is constructed to 138-kV standards.
††† Carney (future)-Jarvis Creek is converted to 138-kV operation.

TABLE B4.5: GOLDEN VALLEY ELECTRIC ASSOCIATION, INC.
TRANSFORMER DATA
EXISTING SYSTEM

Substation - Transformer	Voltage (kV)	Rating* (MVA)	Tap Setting	Tap Range	Reactance**
Autotransformers					
Fort Wainwright-FWS1380T1	138/69	60/80/100	138 000	***	.0800
Gold Hill-GHS1380T1	138/69	18/24/30	134 550	***	.2194
Gold Hill-GHS0690T2	69/34.5	1.725	69 000	†	3.1933
Two Winding Transformers					
Healy-HLP1380T1	138/13.2	18/24/30	134 550	***	.3802††
Healy HLS1380T1	138/24.94	10/12.5	138 000	***	.8180
Healy	24.9/2.4	5	24 900		1.0940
North Pole-NPS1380T1	138/13.2	45/60/75	138 000	***	.1484††
North Pole-NPS 380T3	138/13.2	45/60/75	138 000	***	.1484††
North Pole-NPS0690T2	69/13.2	36/48/60	69 000	†	.2094††
Zehnder-T4 (GSU-GT1)	69/13.8	12/16/20	69 000		.5760
Zehnder-T3 (GSU-GT2)	69/13.8	12/16/20	69 000		.6780
Zehnder-T6	69/4.16	7.5/9.4	69 000		.9470
Zehnder-T5	69/4.16	7.5/9.4	69 000		.9810

* Continuous full load rating at 65°C rise.
** Transformer reactance in per unit on 100-MVA base.
***Tap range: 144 900, 141 450, 138 000, 134 550, 131 100.
† Tap range: 72 450, 70 725, 69 000, 67 275, 65 550.
†† Adjusted to base of 13.8 kV from nameplate base of 13.2 kV.

TABLE B4.6: GOLDEN VALLEY ELECTRIC ASSOCIATION, INC.
TRANSFORMER DATA
PLANNED FACILITIES*

Substation - Transformer	Voltage (kV)	Rating** (MVA)	Tap Setting	Tap Range	Reactance***
Autotransformers					
Carney-1984†	138/69	30/40/50	138 000	††	.1500
Bentley-1992†	138/69		138 000	††	

* Estimated data.
** Continuous full load rating at 65°C rise.
***Transformer reactance in per unit on 100-MVA base.
† Approximate in-service date.
†† Tap range: 144 900, 141 450, 138 000, 134 550, 131 100.

TABLE B4.7: GOLDEN VALLEY ELECTRIC ASSOCIATION, INC.
DISTRIBUTION SUBSTATION DATA
EXISTING SYSTEM

Substation	Transformer* Voltage (kV)	Transformer* Rating** (MVA)	Noncoincident Substation Peak Demand Readings (MW) 1975	1976	1977	1978	1979	1980×
Badger	69/12.47	13.44	2.98	5.65	5.52	3.84	4.80	4.74
Brockman	69/24.94	7.00	NIS	NIS	NIS	1.30xx	1.62	1.76
Chena Pump	69/12.47	22.40	NIS	NIS	NIS	3.12xxx	4.92	3.72
Energy Company	13.8	***	NIS	NIS	2.35+	2.05	2.23	2.10
Fox	69/34.5	8.40	2.57	3.11	2.66	2.61	2.72	3.85
Gold Hill++	34.5	†	.67	.81	.84	.91	.82	.82
Hamilton Acres	69/12.47	22.40	NIS	NIS	NIS	4.80	4.26	3.36
Healy	24.94	††	na	1.15	1.56	na	4.20	3.06
Highway Park	69/12.47	14.00	6.45	7.33	9.22	6.71	5.40	5.66
International Airport	69/12.47	11.20	12.65	13.02	10.68	9.19	5.69	5.42
Jarvis Creek+++	69x138/24.94	22.40	NIS	NIS	NIS	NIS	6.48	6.24
Johnson Road	69/24.94	8.40	4.64	6.43	8.64	7.02	2.48	2.57
Musk Ox	69/12.47	14.00	NIS	NIS	4.39	4.90	3.31	2.84
Nenana	138/24.94	3.12	2.27	2.00	2.05	1.34	1.80	1.94
Peger	69/12.47	13.44	6.67	6.91	5.28	4.80	5.28	5.16
South Fairbanks	69/12.47	11.20	11.01	6.53	7.30	6.16	6.91	6.61
Steese	69/12.47	8.40	7.43	7.67	7.49	6.19	4.90	4.72
University Ave	69/12.47	7.82†††	8.76	9.16	7.39	5.69	4.25	4.25
Zehnder	69/12.47	11.20	11.35	11.36	13.18	12.53	7.63	6.98
			77.45	81.13	88.55	83.16	79.70	75.80

* Load tap changing transformer unless otherwise noted.
** Maximum nameplate continuous full load rating at 65°C rise.
***Supplied from North Pole 13.8-kV bus.
† Supplied from Gold Hill 34.5-kV bus.
†† Supplied from Healy 24.94-kV bus.
†††Maximum rating of two transformers in parallel.
× 1980 maximum demand through July 1980
xx 3 months data.
xxx6 months data.
+ 4 months data.
++ Includes a demand of approximately 300 kW at Murphy Dome supplied by Eielson AFB.
+++Includes a demand of approximately 2,600 kW at Fort Greely supplied from Fort Wainwright.

Abbreviations: na - No data available.
NIS - Not in service.

TABLE B4.8: GOLDEN VALLEY ELECTRIC ASSOCIATION, INC.
DISTRIBUTION SUBSTATION DATA
PLANNED FACILITIES*

Substation	Transformer** Voltage (kV)	Transformer** Rating*** (MVA)	
Newby Road	69/12.47	12	(Approximate in-service date - 1984)

* Estimated data.
** Load tap changing transformer unless otherwise noted.
***Maximum nameplate continuous full load rating at 65°C rise.

TABLE B5.1: UNIVERSITY OF ALASKA, FAIRBANKS
GENERATING CAPACITY AND DATA

Generating Unit	Year of Installation	Type	Capacity (MW)	Remarks
University of Alaska-S1		ST	1.50	Coal
University of Alaska-S2		ST	1.50	Coal
University of Alaska-S3	1980	ST	10.00	Coal
University of Alaska-D1		Diesel	2.75	
University of Alaska-D2		Diesel	2.75	
Total Available Capacity			18.50	

Unit	Voltage (kV)	Rating (MVA)	Power Factor	Generator Impedance* X_d	X'_d	X''_d	X_2	X_o	Inertia Constant**
University of Alaska-S1	4.2	1.875	.80	61.33	8.00	5.33	6.93	2.13	
University of Alaska-S2	4.2	1.875	.80	61.33	8.00	5.33	6.93	2.13	
University of Alaska-S3	4.2	12.50	.80	13.80	1.77	1.02	1.02	0.34	
University of Alaska-D1	4.2	3.438	.80	23.27	8.73	5.24	5.53	1.45	
University of Alaska-D2	4.2	3.438	.80	23.27	8.73	5.24	5.53	1.45	

* Impedance in per unit on 100-MVA base.
**Inertia constant in per unit on 100-MVA base.

Abbreviation: ST - Steam Turbine

TABLE B5.2: UNIVERSITY OF ALASKA, FAIRBANKS
TRANSFORMER DATA

Substation - Transformer	Voltage (kV)	Rating* (MVA)	Tap Setting	Tap Range	Reactance**
Two Winding Transformer					
University of Alaska-1	69/4.16	7.5	LTC		.8933

* Continuous full load rating at 55°C rise.
**Transformer reactance in per unit on 100-MVA base.

Abbreviation: LTC - Load tap changing

TABLE B6.1: MILITARY INSTALLATIONS, FAIRBANKS AREA
GENERATING CAPACITY AND DATA

Generating Unit	Type	Unit Capacity (MW)	Total Capacity (MW)
Eielson AFB-S1, S2	ST	2.50	5.0
Eielson AFB-S3, S4	ST	6.25	12.5
Fort Greely-D1, D2, D3	Diesel	1.00	3.0
Fort Greely-D4, D5	Diesel	1.25	2.5
Fort Wainwright-S1, S2, S3, S4	ST	5.0	20.0
Total Available Capacity			43.0

Unit	Voltage (kV)	Rating (MVA)	Power Factor	Generator Impedance* X_d	X'_d	X''_d	X_2	X_o	Inertia Constant**
Eielson AFB-S1, S2	7.2	3.124	.8	39.36	5.44	2.88	2.88	0.96	
Eielson AFB-S3, S4	7.2	6.250	1.0	18.40	2.40	1.60	2.08	0.64	
Fort Greely-D1, D2, D3	4.2	1.250	.8	64.00	24.00	14.40	15.20	4.00	
Fort Greely-D4, D5	4.2	1.563	.8	51.18	19.20	11.52	12.16	3.20	
Fort Wainwright-S1, S2, S3, S4	12.4	6.25	.8	18.40	2.40	1.60	2.08	0.64	

* Impedance in per unit on 100-MVA base.
**Inertia constant in per unit on 100 MVA base.

Abbreviation: ST - Steam Turbine

TABLE B6.2: MILITARY INSTALLATIONS, FAIRBANKS AREA
TRANSFORMER DATA

Substation - Transformer	Voltage (kV)	Rating* (MVA)	Tap Setting	Tap Range	Reactance**
Two Winding Transformers					
Eielson AFB	69/7.2	5.6	LTC		1.518
Fort Greely	24.9/2.4	2.5	LTC		2.372
Fort Wainwright	69/12.4	8.4			0.983

* Continuous full load rating at 65°C rise.
**Transformer reactance is per unit on 100-MVA base.

Abbreviation: LTC - Load tap changing

TABLE B7.1: MATANUSKA ELECTRIC ASSOCIATION AND
ALASKA POWER ADMINISTRATION
EXISTING GENERATING CAPACITY

Unit	Year of Installation	Type	Capacity (MW)	Remarks
Eklutna - 1 (APA)		Hydro	15	
Eklutna - 2 (APA)		Hydro	15	
Total Available Capacity			30	

TABLE B7.2: MATANUSKA ELECTRIC ASSOCIATION AND
ALASKA POWER ADMINISTRATION
GENERATOR AND TRANSFORMER DATA

Unit	Voltage (kV)	Rating (MVA)	Power Factor	Generator Impedance* X_d	X'_d	X''_d	X_2	X_o	Inertia Constant**
Eklutna - 1 (APA)	6.9	16.667	.9	6.12	1.65	1.16	1.41	.78	
Eklutna - 2 (APA)	6.9	16.667	.9	6.12	1.65	1.16	1.41	.78	

Transformer	Voltage (kV)	Rating (MVA)	Tap Setting	Tap Range	Reactance*
Eklutna - 1 (APA)	115/6.9				
Eklutna - 2 (APA)	115/6.9				

* Impedance in per unit on 100-MVA base.
**Inertia constant in per unit on 100-MVA base.

TABLE B7.3: MATANUSKA ELECTRIC ASSOCIATION AND
ALASKA POWER ADMINISTRATION
TRANSMISSION LINE DATA
EXISTING SYSTEM

Transmission Circuit - Voltage From Bus - To Bus	Length (mi)	Conductor	Pos Seq Impedance* R	Pos Seq Impedance* X	Susceptance** BC	Zero Seq Impedance*** R_o	Zero Seq Impedance*** X_o
Anchorage (APA) - Eklutna (APA) 115 kV†							
Anchorage (APA) - Briggs Tap (MEA)	8.8	397 ACSR (26/7)	.0156	.0528	.0061	.0347	.2023
Briggs Tap (MEA) - Pippel (MEA)	5.0	397 ACSR (26/7)	.0089	.0300	.0035	.0197	.1150
Pippel (MEA) - Parks (MEA)	6.4	397 ACSR (26/7)	.0113	.0384	.0045	.0253	.1471
Parks (MEA) - Reed (MEA)	6.0	397 ACSR (26/7)	.0107	.0360	.0042	.0237	.1380
Reed (MEA) - Eklutna (APA)	7.2	397 ACSR (26/7)	.0158	.0433	.0050	.0284	.1656
Total	33.4						
Briggs (MEA) - Briggs Tap (MEA)	6.3	397 ACSR (26/7)	.0112	.0375	.0045	.0246	.1440
Eklutna (APA) - Shaw (MEA) 115 kV†							
Eklutna (APA) - Dow Tap (MEA)	8.6	397 ACSR (26/7)	.0106	.0502	.0060	.0339	.1977
Dow Tap (MEA) - Lucas (MEA)	5.1	397 ACSR (26/7)	.0090	.0311	.0036	.0203	.1177
Lucas (MEA) - LaZelle Tap (MEA)	4.3	397 ACSR & AAC	.0076	.0255	.0030	.0168	.0977
LaZelle Tap (MEA) - Shaw (MEA)	4.3	397 ACSR (26/7)	.0076	.0229	.0033	.0167	.1026
Total	22.3						
Dow (MEA) - Dow Tap (MEA)	1.2	4/0 ACSR	.0032	.0066	.0008	.0054	.0242
LaZelle - LaZelle Tap	3.9	397 ACSR (26/7)	.0066	.0215	.0030	.0161	.0933
Shaw (MEA) - Teeland (CEA) 115 kV							
Shaw (MEA) - Herning (MEA)	4.8	397 ACSR (26/7)	.0085	.0259	.0037	.0190	.1161
Herning (MEA) - Teeland (CEA)	7.8	397 ACSR (26/7)	.0139	.0422	.0060	.0309	.1891
Total	12.6						
Douglas (MEA) - Teeland (CEA) 115 kV							
Douglas (MEA) - Anderson Tap (MEA)	19.0	556 ACSR (26/7)	.0241	.1111	.0139	.0653	.4339
Anderson Tap (MEA) - Teeland (CEA)	6.5	4/0 ACSR (6/0)	.0219	.0423	.0048	.0365	.1574
Total	25.5						

Table B7.3: Matanuska Electric Association and
Alaska Power Administration
Transmission Line Data
Existing System - 2

Transmission Circuit - Voltage From Bus - To Bus	Length (mi)	Conductor	Pos Seq Impedance* R	Pos Seq Impedance* X	Susceptance** BC	Zero Seq Impedance*** R_o	Zero Seq Impedance*** X_o
Anderson (MEA) - Anderson Tap (MEA)	3.5	4/0 ACSR (6/0)	.0118	.0228	.0026	.0194	.0870

* Positive sequence impedance in per unit on 100-MVA base.
** Total line charging susceptance in per unit on 100-MVA base.
***Zero sequence impedance in per unit on 100-MVA base.
† Eklutna-Anchorage and Eklutna-Lucas 115-kV circuits owned by APA.

Abbreviations: APA - Alaska Power Administration
MEA - Matanuska Electric Association
CEA - Chugach Electric Association, Inc.

TABLE B7.4: MATANUSKA ELECTRIC ASSOCIATION AND
ALASKA POWER ADMINISTRATION
DISTRIBUTION SUBSTATION DATA
EXISTING SYSTEM[x]

Substation	Transformer* Voltage (kV)	Transformer* Rating** (MVA)	Noncoincident Substation Peak Demand Readings (MW) 1975	1976	1977	1978	1979	1980
Anderson	115/12.47	12/16/20	2.74	3.98	6.19	3.94	4.56	na
Camp[†††]			1.37	1.12	2.07	.98	.63	na
Douglas	115/24	12/16/20	NIS	NIS	NIS	2.69	3.07	na
Dow	115/12.47	5	1.98	1.94	2.45	3.24	2.99	na
Herning	115/12.47	22/26/30***	4.99	6.34	11.04	12.96	13.32	na
LaZelle	115/12.97	12/16/20	NIS	NIS	NIS	NIS	3.26	na
Lucas	115/12.47	15[†]	7.82	9.31	12.72	14.98	11.38	na
Parks	115/12.47	10	5.81	3.79	4.42	4.32	4.22	na
Pippel	115/12.47	20[††]	8.06	10.44	9.22	10.51	9.50	na
Reed	115/12.47	5	na	1.97	2.59	2.98	2.98	na
Settlers Bay	34.5/12.47	2.5	NIS	NIS	.65	.76	.50	na
Shaw	115/12.47	12/16/20	NIS	NIS	NIS	4.13	3.84	na
Site Bay	34.5/12.47	1.5	4.17	4.22	4.65	3.48	1.78	na
			36.94	43.11	56.00	64.97	62.03	na

* Load tap changing transformer unless otherwise noted.
** Maximum nameplate continuous full load rating at 55°C rise.
***Two transformers in parallel, one 10 MVA and one 12/16/20 MVA.
† Two transformers in parallel, one 5 MVA and one 10 MVA.
†† Two transformers in parallel, each 10 MVA.
†††Supplied at Eklutna.
x All distribution facilities are MEA.

Abbreviations: na - No data available.
NIS - Not in service.

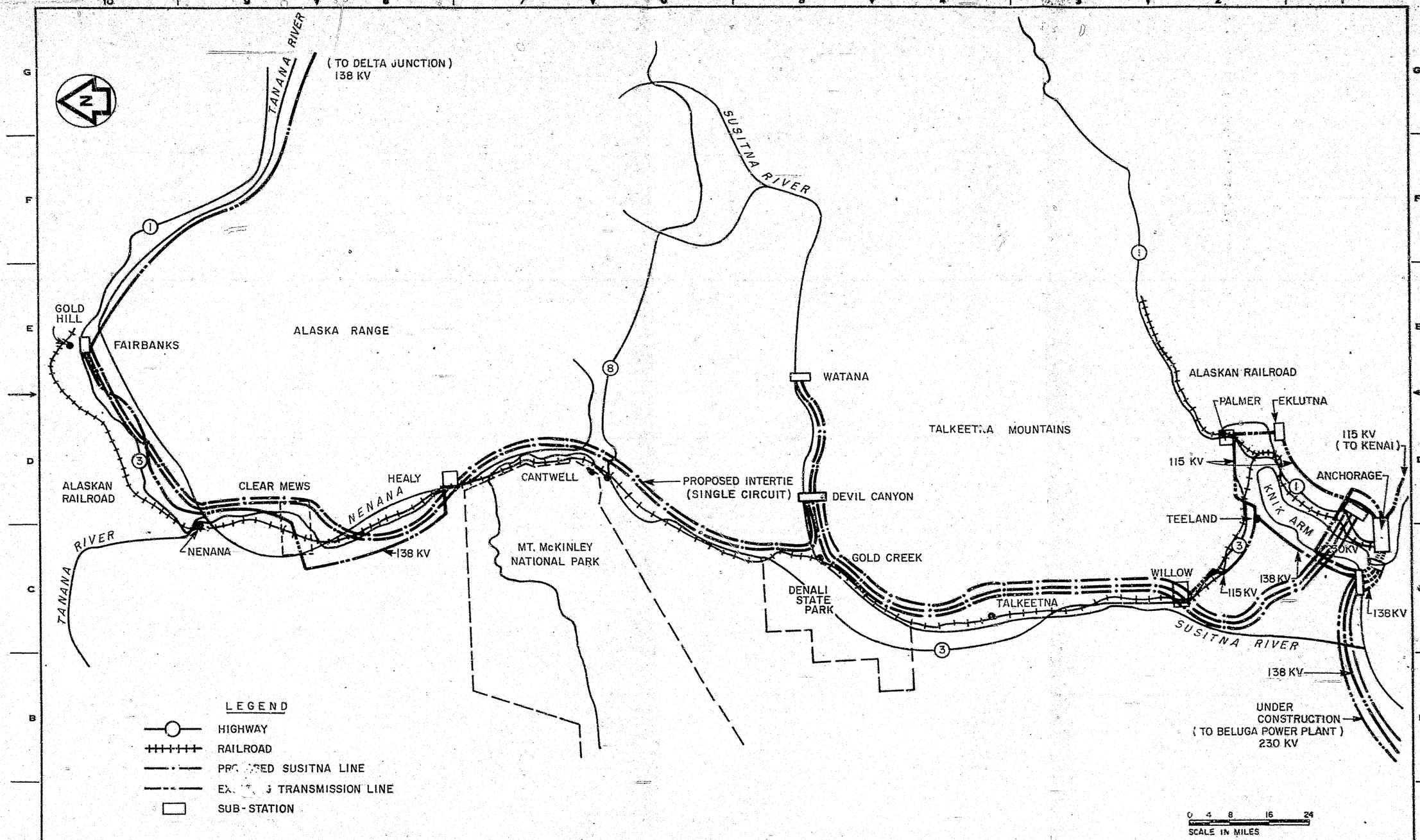

ANCHORAGE–FAIRBANKS RAILBELT AREA MAP

FIGURE B.I

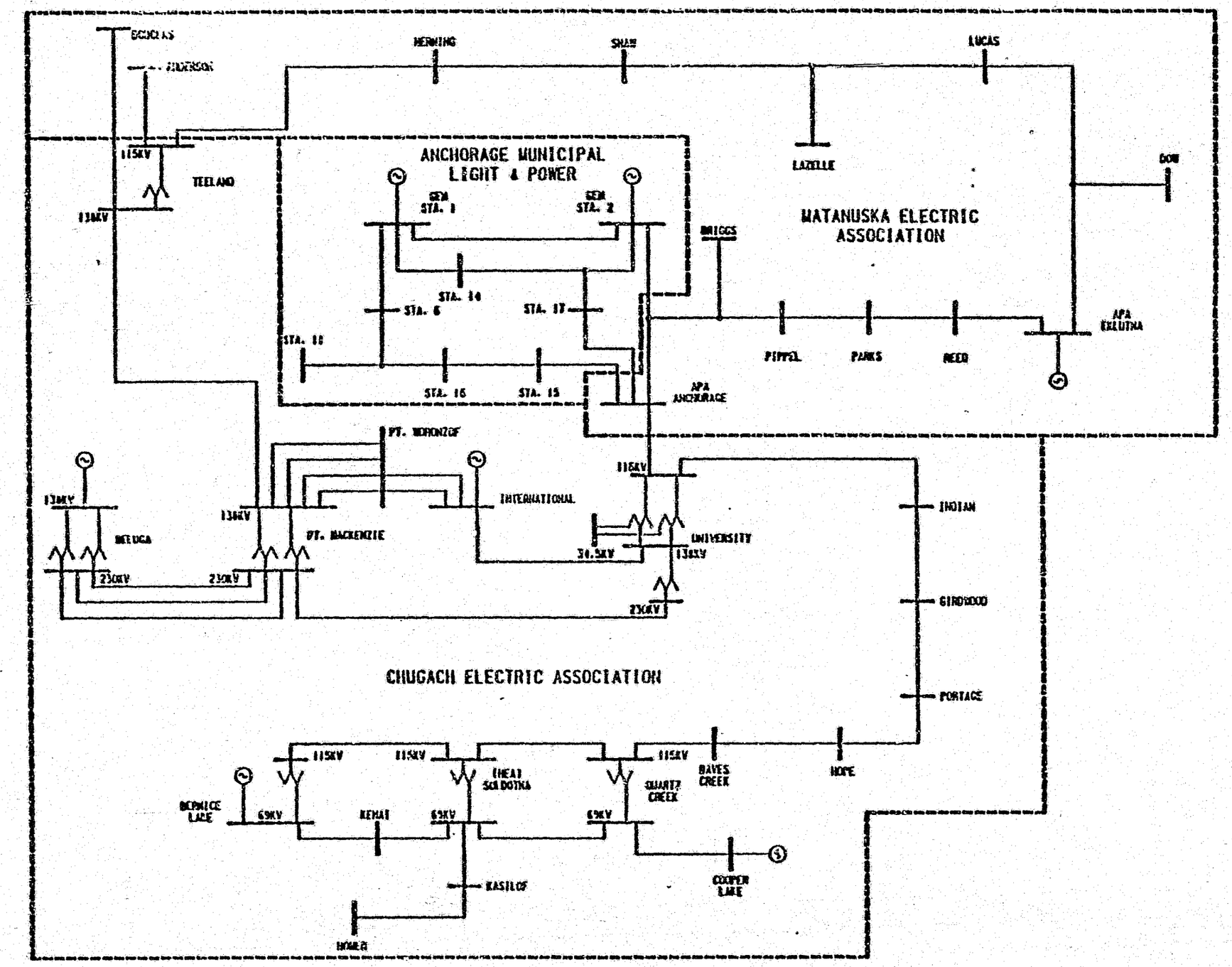

ANCHORAGE AREA ONE-LINE DIAGRAM—1984 SYSTEM

FIGURE B.2

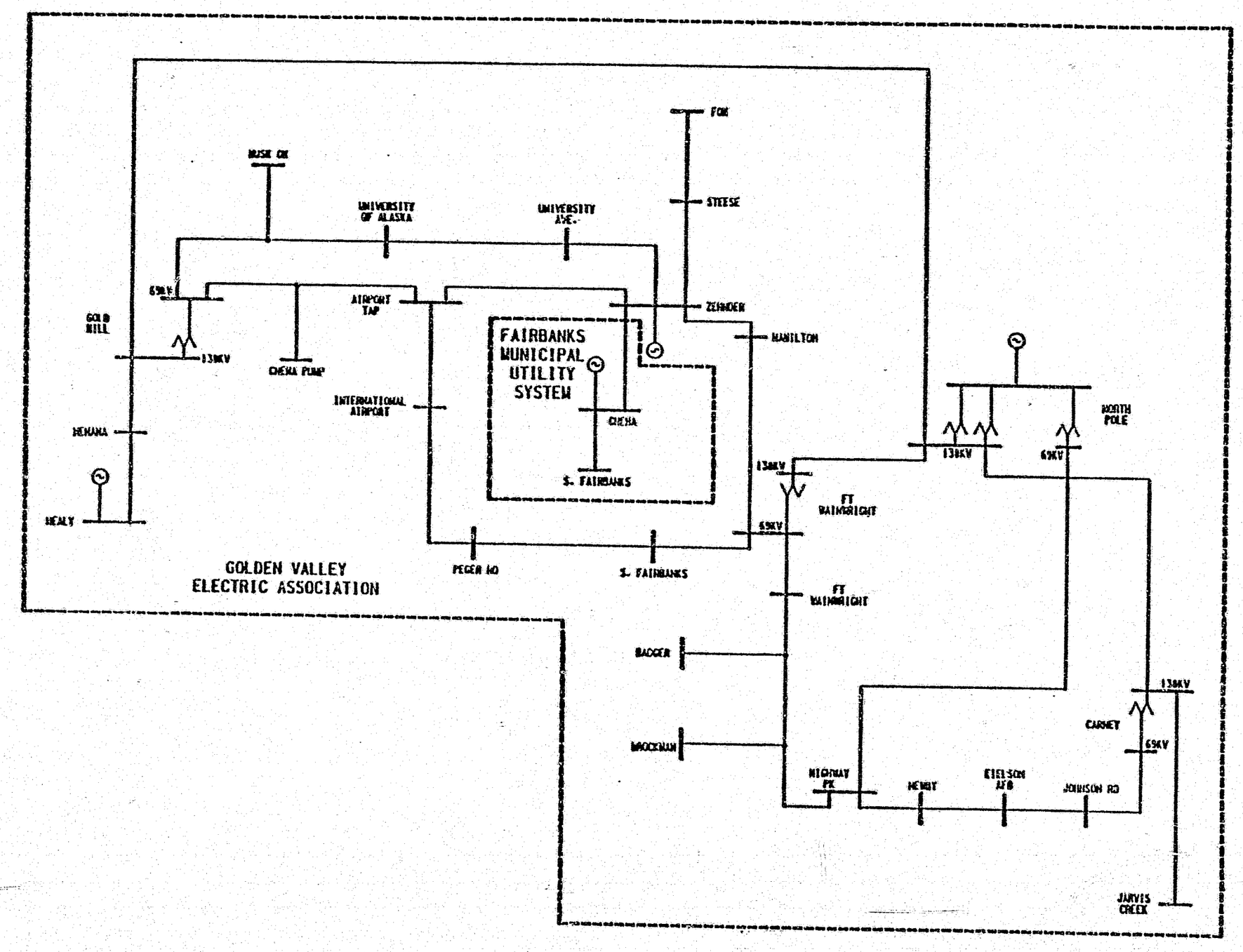

FAIRBANKS AREA ONE-LINE DIAGRAM-1984 SYSTEM

FIGURE B.3

ACRES

APPENDIX C

ECONOMIC CONDUCTOR SIZES

TABLE OF CONTENTS

LIST OF TABLES

LIST OF FIGURES

APPENDIX C

ECONOMIC CONDUCTOR SIZES

C1 - INTRODUCTION

In EHV transmission, line conductors and conductor bundles must be sized to minimize corona, RI and audible noise effects. An additional factor that needs to be quantified is the economic incentive to increase the conductor section still further to achieve savings in the future cost of line loss.

This appendix deals with the economic aspects of conductor sizing, and since both line costs and line losses are proportional to line length, the analysis is carried out on the basis of costs per circuit-mile.

C2 - LINE CAPITAL COST

Transmission costs are generally a function of the transmission voltage and conductor size, modified by local considerations such as meteorological factors, access, transport costs and local labor costs. At a particular voltage, the variation in line cost as a function of conductor area is normally of the form.

$$\text{Line cost per mile} = K_1 + K_2\,(\text{kcmil})^a$$

On the basis of line cost estimates for Alaska, values of "K_1", "K_2" and "a" have been determined. These are approximate, but they describe the relationship between line cost and conductor size sufficiently well to be used as a guide in determining the economic size of line conductor. The equations are shown below.

230 kV: $/mile $\cong$ 110 000 + 16 $(\text{kcmil})^{1.18}$

345 kV: $/mile $\cong$ 160 000 + 16 $(\text{kcmil})^{1.18}$

500 kV: $/mile $\cong$ 285 000 + 16 $(\text{kcmil})^{1.18}$

C3 - CAPITALIZED COST OF LOSS

Line loss varies directly as the square of the line loading and inversely as the conductor cross-sectional area. Since the line loading varies in a daily pattern and also throughout the life of the facility, these variations must be taken into account.

Transmission line loading over the life of the facility can only be estimated at this time. According to generation planning studies, each time a block of 400 MW of generation is commissioned (in years 1993, 1996 and 2000), this capability is fully absorbed by the system. It is further assumed that all of the average energy capability at Susitna would be utilized at each development stage, resulting in load factors (LF) and loss load factors (LLF) as indicated in the table below. In this table no generation additions are included after year 2000 as the contribution to loss energy from any additional peaking capacity is assumed to be negligible.

Period	Susitna Capacity (MW)	Susitna Energy (GW·h)	Susitna LF	Susitna LLF*	Line Loadings (MW) To Anchorage	Line Loadings (MW) To Fairbanks
1993 to 1996	400	2 990	0.85	0.786	320	80
1996 to 2000	800	3 252	0.46	0.336	640	160
2000 to 2043	1 200	6 227	0.59	0.469	960	240

Expressing line loading and line resistance in per unit on surge impedance loading (SIL) and surge impedance (Zc) base leads to the following expressions.

Line resistance $= \frac{100}{\text{kcmil}}$ ohms per mile

$= \frac{100}{\text{kcmil}} \times \frac{1}{Zc}$ per unit per mile

If line loading = S per unit on SIL base

Then line loss per mile $= S^2 \times \frac{100}{\text{kcmil}} \times \frac{1}{Zc}$ per unit

and since SIL $= \frac{kV^2}{Zc}$ (MW)

Line loss per mile $= S^2 \times \frac{100}{\text{kcmil}} \times \frac{1}{Zc} \times \frac{kV^2}{Zc}$ (MW/mile)

Annual loss energy/mile $= S^2 \times \frac{100}{\text{kcmil}} \times \frac{kV^2}{Zc^2} \times 8.76 \times \text{LLF}$ (GW·h/mile)

And if the cost of loss energy = c \$/kW·h

= c \$ million/GW·h

Then annual cost of loss $= S^2 \times \frac{100}{\text{kcmil}} \times \frac{kV^2}{Zc^2} \times 8.76 \times \text{LLF} \times c$ (\$ million/mile)

---

*Loss load factor (LLF) is estimated as $\text{LLF} = \frac{\text{LF}^2 + \text{LF}}{2}$

A typical value of C for Susitna is \$0.035/kW·h. This energy cost is an average figure derived in the OGP-5 planning studies based on zero inflation and 3 percent net cost of money.

$$\therefore \text{Annual cost of loss} = \frac{30.66\ S^2\ kV^2}{kcmil\ Zc^2}\ LLF\ (\$\ \text{million/mile})$$

In Tables C3.1 and C3.2 the capitalized cost of loss per mile is derived for transmission to Anchorage and Fairbanks, respectively, as a function of conductor size and for the line voltages that are being considered. The capitalized cost of loss is derived in three components, representing the three stages of development of the project. In all cases two circuits are assumed from the outset for security reasons. In the case where three circuits are used for the ultimate line loading, it is assumed that the third circuit is added at the final (1,200 MW) stage of development.

In Table C3.3 the line capital cost and capitalized cost of loss (as developed in Tables C3.1 and C3.2) are shown as a function of conductor area for each voltage and transmission alternative. The indicated optimum conductor areas are also given in the table and these were derived as follows.

$$\text{If line capital cost} = K_1 + K_2\ (kcmil)^a\ \$\ \text{million/mile}$$

$$\text{and capitalized cost of loss} = \frac{K_3}{kcmil}\ \$\ \text{million/mile}$$

$$\text{Total cost per mile} = K_1 + K_2\ (kcmil)^a + \frac{K_3}{kcmil}\ \$\ \text{million/mile}$$

Differentiating with respect to kcmil and equating to zero for minimum total cost per mile.

$$\frac{d\ \text{cost}}{d\ \text{kcmil}} = a \cdot K_2 (\text{kcmil})^{a-1} - \frac{K_3}{(\text{kcmil})^2} = 0$$

$$a \cdot K_2 (\text{kcmil})^{a-1} = \frac{K_3}{(\text{kcmil})^2}$$

$$(\text{kcmil})^{a+1} = \frac{K_3}{a \cdot K_2}$$

$$\text{and kcmil} = \left(\frac{K_3}{a \cdot K_2}\right)^{\frac{1}{a+1}}$$

In two cases, namely 500-kV transmission to Anchorage and 345 kV to Fairbanks, line losses are relatively low and lead to indicated economic conductor areas that are below the acceptable limit from an RI and Corona point of view. The proposed conductor sizes which are shown at the bottom of Table 3 have been adjusted, where necessary, to provide acceptable Corona and RI performance.

The relationship between line capital cost and total cost (including capitalized cost of loss) is shown graphically as a function of conductor area in Figure C3.1. The cases illustrated are for 345 kV to Anchorage and 230 kV to Fairbanks, the two cases where cost of loss was a factor in the proposed conductor arrangement.

TABLE C3.1: TRANSMISSION LINE TO ANCHORAGE DEVELOPMENT OF CAPITALIZED COST OF LOSS

Period	Total Load (MW)	No. of Circuits	Loading per Circuit (MW)		Loading per Circuit on SIL Base[1] (S-pu)	LLF	Annual[2] Cost of Loss ($M·kcmil / cct·mile)	n[3] (yr)	m[4] (yr)	Present[5] Worth Factor	Capitalized Cost of Loss ($M·kcmil / cct·mile)
1993 - 1996	320	2	160	345 kV	0.386	0.786	5.195	3	0	2.8286	14.695
1996 - 2000	640	2	320	345 kV	0.771	0.336	8.861	4	3	3.4017	30.142
2000 - 2043	960	2	480	345 kV	1.157	0.469	27.854	43	7	19.4995	543.139
								Total at 345 kV (2 circuits) =			587.976
1993 - 1996	320	2	160	345 kV	0.386	0.786	5.195	3	0	2.8286	14.695
1996 - 2000	640	2	320	345 kV	0.771	0.336	8.861	4	3	3.4017	30.142
2000 - 2043	960	3	320	345 kV	0.771	0.469	12.368	43	7	19.4995	241.179
								Total at 345 kV (3 circuits) =			286.016
1993 - 1996	320	2	160	500 kV	0.178	0.786	2.474	3	0	2.8286	6.998
1996 - 2000	640	2	320	500 kV	0.356	0.336	4.230	4	3	3.4017	14.389
2000 - 2043	960	2	480	500 kV	0.533	0.469	13.236	43	7	19.4995	258.095
								Total at 500 kV (2 circuits) =			279.482

[1] SIL base values are 415 MW (345 kV) and 900 MW (500 kV).

[2] Annual cost of loss = $30.66\ S^2 \cdot kV^2 \cdot LLF/Zc^2$ based on losses valued at $0.035/kW·h.

[3] n = duration of load period

[4] m = offset from present worth datum.

[5] Present worth factor = $\frac{1}{i}\left[1 - \frac{1}{(1+i)^n}\right] \times \frac{1}{(1+i)^m}$, annual discount rate (i) = 3 percent.

TABLE C3.2: TRANSMISSION LINE TO FAIRBANKS DEVELOPMENT OF CAPITALIZED COST OF LOSS

Period	Total Load (MW)	No. of Circuits	Loading per Circuit (MW)		Loading per Circuit on SIL Base[1] (S-pu)	LLF	Annual[2] Cost of Loss ($\frac{\$M \cdot kcmil}{cct \cdot mile}$)	n[3] (yr)	m[4] (yr)	Present[5] Worth Factor	Capitalized Cost of Loss ($\frac{\$M \cdot kcmil}{cct \cdot mile}$)
1993 - 1996	80	2	40	230 kV	0.292	0.786	0.7290	3	0	2.8286	2.0620
1996 - 2000	160	2	80	230 kV	0.584	0.336	1.2466	4	3	3.4017	4.2406
2000 - 2043	240	2	120	230 kV	0.876	0.469	3.9151	43	7	19.4995	76.3425
								Total at 230 kV (2 circuits) =			82.6451
1993 - 1996	80	2	40	345 kV	0.100	0.786	0.3240	3	0	2.8286	0.9165
1996 - 2000	160	2	80	345 kV	0.200	0.336	0.5539	4	3	3.4017	1.8842
2000 - 2043	240	2	120	345 kV	0.300	0.469	1.7397	43	7	19.4995	33.9233
								Total at 345 kV (2 circuits) =			36.7240

[1] SIL base values are 137 MW (230 kV) and 400 MW (345 kV).

[2] Annual cost of loss = 30.66 $S^2 \cdot kV^2 \cdot LLF/Zc^2$ based on losses valued at $0.035/kW·h.

[3] n = duration of load period.

[4] m - offset from present worth datum.

[5] Present worth factor = $\frac{1}{i}\left[1 - \frac{1}{(1+i)^n}\right] \times \frac{1}{(1+i)^m}$, annual discount rate (i) = [illegible] percent.

TABLE C3.3: SUMMARY OF ECONOMIC FACTORS AND PROPOSED CONDUCTOR SIZES

	Transmission to Anchorage			Transmission to Fairbanks	
	500 kV 2 Circuits	345 kV 3 Circuits	345 kV 2 Circuits	345 kV	230 kV
Capital cost of line ($M/mile)	$0.285 + \frac{16}{10^6}\,\text{kcmil}^{1.18}$	$0.16 + \frac{16}{10^6}\,\text{kcmil}^{1.18}$	$0.16 + \frac{16}{10^6}\,\text{kcmil}^{1.18}$	$0.16 + \frac{16}{10^6}\,\text{kcmil}^{1.18}$	$0.11 + \frac{16}{10^6}\,\text{kcmil}^{1.18}$
Capitalized cost of loss* ($M/mile)	$\frac{279.482}{\text{kcmil}}$	$\frac{286.106}{\text{kcmil}}$	$\frac{587.976}{\text{kcmil}}$	$\frac{36.7240}{\text{kcmil}}$	$\frac{82.6451}{\text{kcmil}}$
Optimum conductor area** (MCM)	1,946	1,967	2,737	767	1,113
Proposed conductors	3x795***	2x954	2x1,351	2x795***	1x1,272

*Capitalized cost of loss expressions are derived in tables 1 and 2.

**Optimum conductor area = $\left(\frac{\text{Capitalized cost of loss}}{16\text{x}1.18}\right)^{\frac{1}{2.18}}$ kcmil per phase.

***The economic conductor areas for 500 kV to Anchorage and 345 kV to Fairbanks are smaller than the minimum needed for RI and Corona performance. Hence, RI considerations will dictate conductor size.

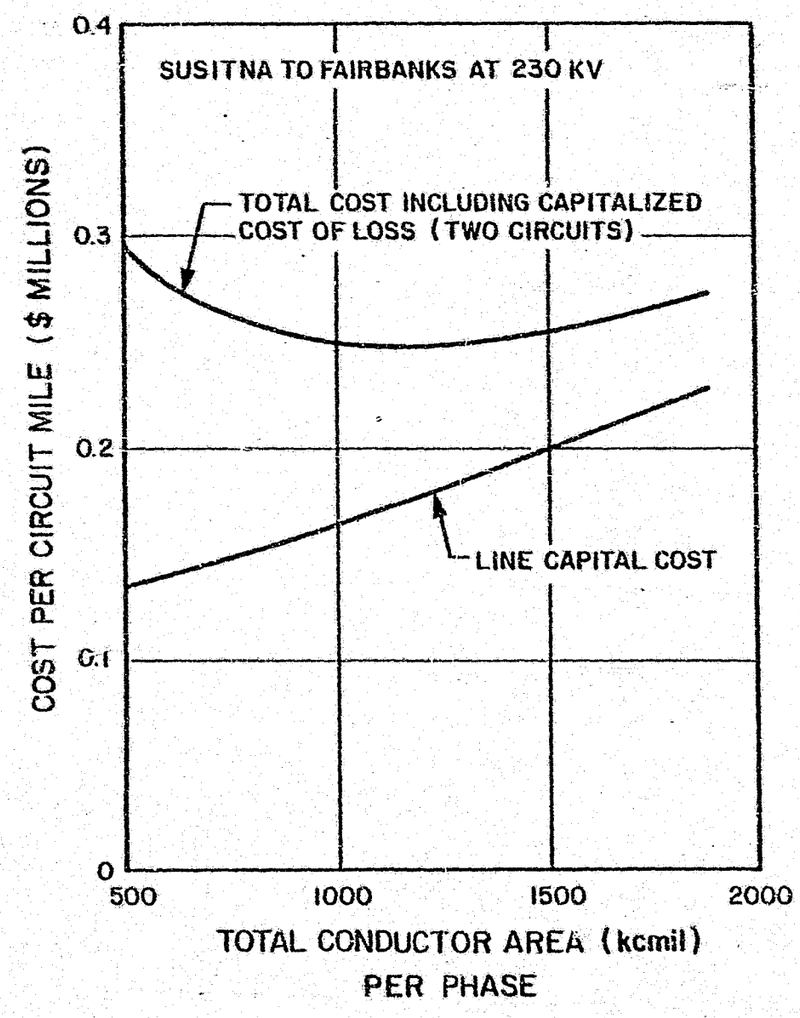

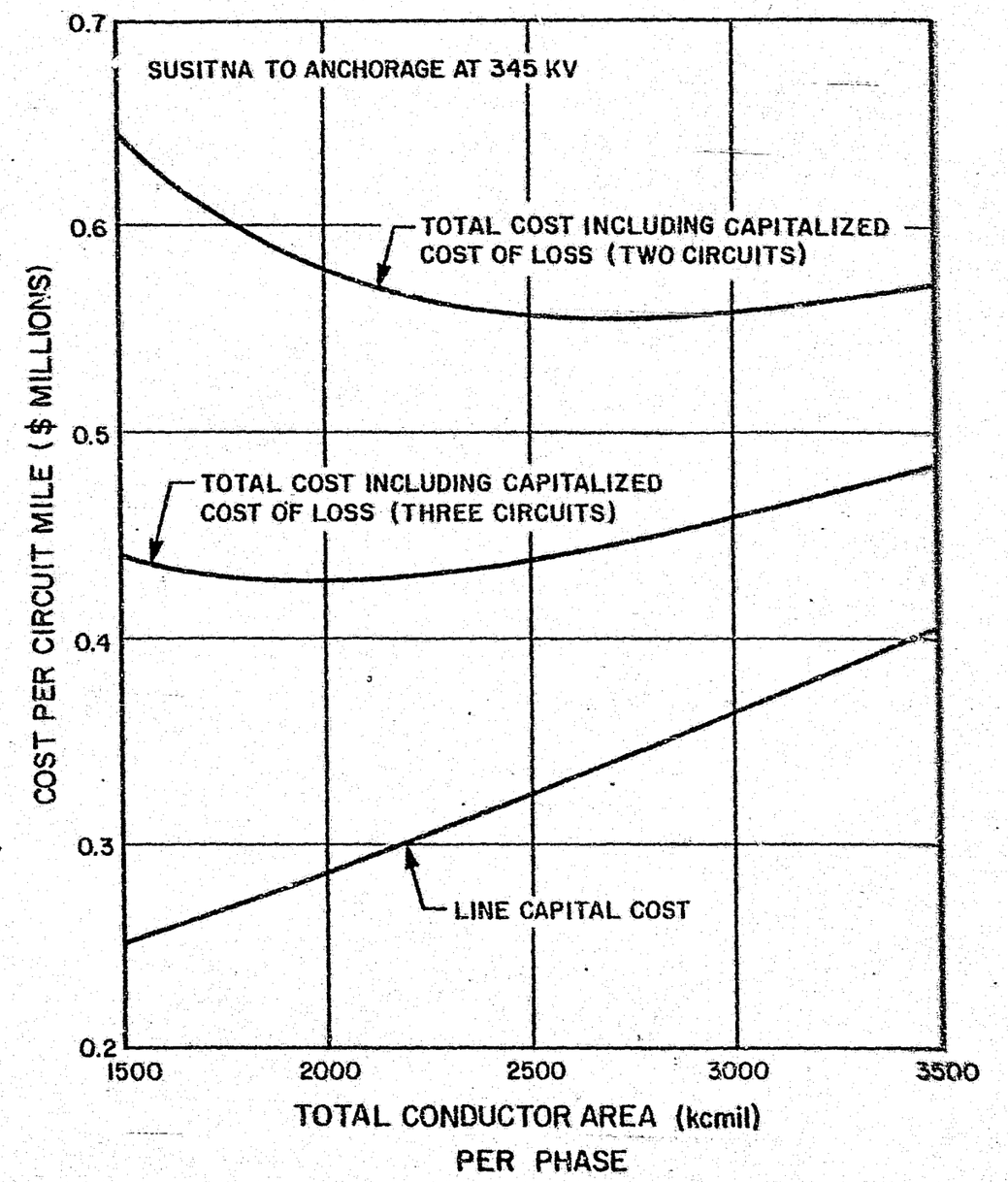

TRANSMISSION – TOTAL COSTS PER MILE AS A FUNCTION OF CONDUCTOR AREA

FIGURE C3.1

APPENDIX D

COST ESTIMATES

LIST OF TABLES

APPENDIX D

COST ESTIMATES

The economic analysis for the Susitna transmission system was carried out using cost estimates based on 1981 unit costs, without escalation, for all equipment and services. The unit costs for all transmission and substation equipment are given in Table D.1. The principal parameters of the five transmission alternatives analyzed in detail are as follows.

	Susitna to Anchorage (140 Miles)			Susitna to Fairbanks (189 Miles)		
Alternative	Number of Circuits	Voltage (kV)	Conductors (kcmil)	Number of Circuits	Voltage (kV)	Conductors (kcmil)
1	2	345*	2 x 1 351	2	345	2 x 795
2	3	345	2 x 954	2	345	2 x 795
3	2	345*	2 x 1 351	2	230*	1 x 1 272
4	3	345	2 x 954	2	230*	1 x 1 272
5	2	500	3 x 795	2	230*	1 x 1 272

The transmission line capital cost estimates for the five transmission alternatives are shown in Table D.2. The 1993 line costs include an adjustment for the use of a larger conductor than required by the intertie, 9 years before the construction of the Susitna transmission system. This adjustment accounts for intertie construction with conductors ultimately required for Susitna transmission. The adjustment consists of the difference in line costs multiplied by the length of the line section in question and the factor to account for the

*Denotes series compensation.

accummulated interest for the incremental conductor cost. It is calculated as follows.

$$\begin{aligned}\text{Adjustment} &= \text{length}\cdot[(1.00+i)^n - 1.00]\cdot(Cs-Ci)\\ &= \text{length}\cdot[(1.03)^9 - 1.00]\cdot(Cs-Ci)\\ &= \text{length}\cdot 0.3048\cdot(Cs-Ci)\end{aligned}$$

where

i = discount rate (3.0 percent)
n = time period (9 years)
Cs = cost of Susitna conductor in $M/mile
Ci = cost of conductor required for intertie in $M/mile.

The substation capital cost estimates are shown in Table D.3 and include a base cost plus costs for major components at each station. The base cost includes land acquisition, site preparation, foundations, etc. Cost estimates of major equipment, such as circuit breakers, transformers, etc, include the costs of all ancillaries such as disconnect switches, potential and current transformers, controls, instrumentation, etc. At the generating stations all EHV circuit breakers are included, but generator transformers and low-voltage breakers are excluded. These are included in the powerhouse estimates. Similarly at the load centers all EHV breakers are included as well as the necessary circuit entries at the subtransmission voltage (230 kV or 138 kV) for each transformer bank. The remainder of the lower voltage station is common to all alternatives and therefore excluded from the economic comparison. At Anchorage, transformation to 230 kV is assumed on the west side of Knik Arm implying cable crossings at 230 kV. The cable crossings and other 230-kV equipment are considered common to all ac transmission alternatives for Susitna and their costs have been excluded from this estimate. They must be included for comparison of schemes with different Knik Arm crossing configurations such as HVDC transmission from Susitna.

The calculations of annual charges for transmission lines and substations are shown in Table D.4. Annual charges include the following components.

Item	Percent of Transmission Capital Per Year	Percent of Substation Capital Per Year
Operating and maintenance	1.00	2.00
Insurance	0.10	0.10
Interim replacement	0.15	0.15
Contribution in lieu of taxes	2.00	2.00
TOTALS	3.25	4.25

At a discount rate of 3.0 percent and for a 50-yr period of analysis from 1993 to 2043 the capitalized annual charges are calculated as follows.

For equipment commissioned in 1993

Transmission lines: $\frac{3.25 \text{ percent}}{0.03} \left[\frac{(1.03)^{50} - 1.00}{(1.03)^{50}}\right]$

= 83.62 percent of 1993 transmission line capital cost

Substations: $\frac{4.25 \text{ percent}}{0.03} \left[\frac{(1.03)^{50} - 1.00}{(1.03)^{50}}\right]$

= 109.35 percent of 1993 substation capital cost

For equipment commissioned in 2000

Transmission lines: $\frac{3.25 \text{ percent}}{0.03} \left[\frac{(1.03)^{43} - 1.00}{(1.03)^{43}}\right]$

= 77.94 percent of 2000 transmission line capital cost

Substations: $\frac{4.25 \text{ percent}}{0.03} \left[\frac{(1.03)^{43} - 1.00}{(1.03)^{43}}\right]$

= 101.92 percent of 2000 substation capital cost

Costs of land acquisition and clearing for transmission lines are calculated in Table D.5. It is assumed that all right-of-way requirements will be acquired in 1993. This includes the land acquisition costs for all additional circuits to be constructed in the year 2000.

Costs of capitalized transmission line losses are calculated in Table D.6. Unit costs per mile for capitalized transmission losses have been derived from the costs of loss developed in Appendix C, "Economic Conductor Sizes". In the case of the line section from Watana to Devil Canyon the unit costs have been adjusted to take into account the loading that will apply during the various stages of project development.

TABLE D.1: TRANSMISSION AND SUBSTATION UNIT COSTS

Transmission

Line Costs

Voltage (kV)	Conductor (kcmil)	Base Cost ($/circuit mile)	Final Cost* ($/circuit mile)
230	1 x 954	120,000	162,000
230	1 x 1 272	136,000	184,000
230	1 x 1 351	140,000	189,000
345	2 x 795	190,000	256,000
345	2 x 954	207,000	279,000
345	2 x 1 351	251,000	339,000
500	3 x 795	326,000	440,000

Land Acquisition and Clearing

Voltage (kV)	Number of Circuits	$/Mile
230	2	70,000
345	2	75,000
345	3	96,000
500	2	80,000

Substations

Voltage (kV)	Station Base Cost** ($ Million)	Circuit Breaker Position ($ Million)
138	1.000	0.400
230	1.500	0.700
345	2.000	1.000
500	2.500	1.600

Table D.1
Transmission and Substation Unit Costs - 2

Autotransformers (including 15-kV tertiary)

Voltage (kV)	75 MVA ($ Million)	150 MVA ($ Million)	250 MVA ($ Million)
230/138	-	0.800	1.100
345/138	0.500	0.900	1.300
500/138	0.700	1.200	1.600
345/230	-	0.900	1.300
500/230	-	1.200	1.600

Generator Transformers

Voltage (kV)	$/kVA
345	4.20
500	5.00

Shunt Reactors

Voltage (kV)	50 MVARS ($/kVAR)	75 MVARS ($/kVAR)
345	-	1.11
500	24.60	17.20

Series Compensation (all voltages)

$14.00/kVAR

Static VAR Sources (tertiary voltage)

$30.00/kVAR

---

* Final transmission line costs (page 1 of table) include 20 percent contingency, plus 5 percent engineering, 5 percent construction management and 2.5 percent owner's cost.

**Substation base cost (page 1 of table) includes land acquisition, site preparation, foundations, etc.

TABLE D.2: TRANSMISSION LINE CAPITAL COSTS

Year 1993 Transmission Line Costs		Unit Cost ($M/mi)	Transmission Alternative 1 Circuit Miles	1 $M	2 Circuit Miles	2 $M	3 Circuit Miles	3 $M	4 Circuit Miles	4 $M	5 Circuit Miles	5 $M
Watana to Devil Canyon (27 mi)												
Voltage	Conductor											
345 kV	2 x 954 kcmil	0.207	-	-	54	11.18	-	-	54	11.18	-	-
345 kV	2 x 1,351 kcmil	0.251	54	13.55	-	-	54	13.55	-	-	-	-
500 kV	3 x 795 kcmil	0.326	-	-	-	-	-	-	-	-	54	17.60
Devil Canyon to Anchorage (140 mi)												
345 kV	2 x 954 kcmil	0.207	-	-	280	57.96	-	-	280	57.96	-	-
345 kV	2 x 1,351 kcmil	0.251	280	70.28	-	-	280	70.28	-	-	-	-
500 kV	3 x 795 kcmil	0.326	-	-	-	-	-	-	-	-	280	91.28
Devil Canyon to Fairbanks (189 mi)												
230 kV	1 x 1,272 kcmil	0.136					293	39.95	378	51.41	378	51.41
230 kV	1 x 1,351 kcmil	0.140					85	11.90				
345 kV	2 x 795 kcmil	0.190	293	55.67	293	55.67						
345 kV	2 x 954 kcmil	0.207			85	17.60						
345 kV	2 x 1,351 kcmil	0.251	85	21.34								
Subtotal 1993 line costs				160.84		142.41		135.[illegible]		120.55		160.29
Contingency (20 percent)				32.17		28.48		27.14		24.11		32.06
Subtotal				193.01		170.89		162.82		144.66		192.35
Engineering and Management (12.5 percent)*				24.13		21.36		20.35		18.08		24.04
TOTAL 1993 Transmission Line Costs				217.13		192.25		183.17		162.74		216.39
Adjustment For Advanced Intertie Construction With Larger Conductor**			$M/mi	$M	$M/mi	$M	$M/mi	$M	$M/mi	$M	$M/mi	$M
Willow to Gold Creek (80 mi)			(0.251-0.207)	1.07	(0.207-0.207)	0	(0.251-0.120)	3.19	(0.207-0.120)	2.12	(0.326-0.120)	5.02
Gold Creek to Healy (85 mi)			(0.251-0.207)	1.14	(0.207-0.207)	0	(0.140-0.120)	0.52	(0.136-0.120)	0.41	(0.136-0.120)	0.41
Subtotal intertie adjustment				2.21		0		3.71		2.53		5.43
Contingency, engineering, etc				0.77		0		1.30		0.89		1.90
Total adjustment				2.98		0		5.01		3.42		7.33
TOTAL Adjusted 1993 Transmission Line Costs				220.12		192.25		188.18		166.16		223.72

Table D.2: Transmission Line Capital Costs - 2

Year 2000 Transmission Line Costs		Unit Cost ($M/mi)	Transmission Alternative 1 Circuit Miles	1 $M	2 Circuit Miles	2 $M	3 Circuit Miles	3 $M	4 Circuit Miles	4 $M	5 Circuit Miles	5 $M
Devil Canyon to Anchorage (140 mi)												
Voltage	Conductor											
345 kV	2 x 954 kcmil	0.207	-	-	140	28.98	-	-	140	28.98	-	-
Contingency (20 percent)						5.80				5.80		
Subtotal						34.78				34.78		
Engineering and Management (12.5 percent)*						4.35				4.35		
TOTAL 2000 Transmission Line Capital Costs				-		39.12		-		39.12		-

* Engineering and Management includes

- Engineering	5.0 percent
- Construction Management	5.0 percent
- Owner's Cost	2.5 percent
- Total	12.5 percent

**Intertie adjustment accounts for construction with a larger conductor than required by the intertie 9 years before construction of Susitna transmission system.

TABLE D.3: SUBSTATION CAPITAL COSTS

Year 1993 Substation Costs	Unit Cost ($M)	Transmission Alternative 1 Quantity	1 $M	2 Quantity	2 $M	3 Quantity	3 $M	4 Quantity	4 $M	5 Quantity	5 $M
Anchorage											
Base cost - 345 kV	2.00	1	2.00	1	2.00	1	2.00	1	2.00		
- 500 kV	2.50									1	2.50
Circuit breakers - 230 kV	0.70	6	4.20	6	4.20	6	4.20	6	4.20	6	4.20
- 345 kV	1.00	9	9.00	9	9.00	9	9.00	9	9.00		
- 500 kV	1.60									11	17.60
Transformers - 345/230 kV, 250 MVA	1.30	4	5.20	4	5.20	4	5.20	4	5.20		
- 500/230 kV, 250 MVA	1.60									4	6.40
Shunt reactors - 500 kV, 50 MVAR	1.23									2	2.46
Static VAR sources (MVAR)	0.03	400	12.00	400	12.00	400	12.00	400	12.00	200	6.00
Subtotal			32.40		32.40		32.40		32.40		39.16
Contingency (20 percent)			6.48		6.48		6.48		6.48		7.83
Subtotal			38.88		38.88		38.88		38.88		46.99
Engineering and management (12.5 percent)*			4.86		4.86		4.86		4.86		5.87
TOTAL 1993 Anchorage Station Cost			43.74		43.74		43.74		43.74		52.87
Willow											
Base cost - 345 kV	2.00	1	2.00	1	2.00	1	2.00	1	2.00		
- 500 kV	2.50									1	2.50
Circuit breakers - 138 kV	0.40	3	1.20	3	1.20	3	1.20	3	1.20	3	1.20
- 345 kV	1.00	9	9.00	9	9.00	9	9.00	9	9.00		
- 500 kV	1.60									11	17.60
Transformers - 345/138 kV, 75 MVA	0.50	2	1.00	2	1.00	2	1.00	2	1.00		
- 500/138 kV, 75 MVA	0.70									2	1.40
Shunt reactors - 500 kV, 75 MVAR	1.29									2	2.58
Subtotal			13.20		13.20		13.20		13.20		25.28

Table D.3: Substation Capital Costs - 2

Year 1993 Substation Costs	Unit Cost ($M)	Transmission Alternative 1 Quantity	1 $M	2 Quantity	2 $M	3 Quantity	3 $M	4 Quantity	4 $M	5 Quantity	5 $M
Contingency (20 percent)			2.64		2.64		2.64		2.64		5.06
Subtotal			15.84		15.84		15.84		15.84		30.34
Engineering and management (12.5 percent)*			1.98		1.98		1.98		1.98		3.79
TOTAL 1993 Willow Station Cost			17.82		17.82		17.82		17.82		34.13
Devil Canyon											
Base cost - 230 kV	1.50					1	1.50	1	1.50	1	1.50
- 345 kV	2.00	1	2.00	1	2.00	1	2.00	1	2.00		
- 500 kV	2.50									1	2.50
Circuit breakers - 230 kV	0.70					8	5.60	8	5.60	8	5.60
- 345 kV	1.00	12	12.00	12	12.00	15	15.00	15	15.00		
- 500 kV	1.60									15	24.00
Transformers - 345/230 kV, 150 MVA	0.90					3	2.70	3	2.70		
- 500/230 kV, 150 MVA	1.20									3	3.60
Generator transformer incremental cost, 220 MVA	0.176**									3	0.53
Subtotal			14.00		14.00		26.80		26.80		37.73
Contingency (20 percent)			2.80		2.80		5.36		5.36		7.55
Subtotal			16.80		16.80		32.16		32.16		45.28
Engineering and management (12.5 percent)*			2.10		2.10		4.02		4.02		5.66
TOTAL 1993 Devil Canyon Station Cost			18.90		18.90		36.18		36.18		50.94
Watana											
Base cost - 345 kV	2.00	1	2.00	1	2.00	1	2.00	1	2.00		
- 500 kV	2.50									1	2.50
Circuit breakers - 345 kV	1.00	9	9.00	9	9.00	9	9.00	9	9.00		
- 500 kV	1.60									9	14.40
Generator transformer incremental cost, 220 MVA	0.176**									4	0.70
Subtotal			11.00		11.00		11.00		11.00		17.60

Table D.3: Substation Capital Costs - 3

Year 1993 Substation Costs	Unit Cost ($M)	Transmission Alternative 1 Quantity	1 $M	2 Quantity	2 $M	3 Quantity	3 $M	4 Quantity	4 $M	5 Quantity	5 $M
Contingency (20 percent)			2.20		2.20		2.20		2.20		3.52
Subtotal			13.20		13.20		13.20		13.20		21.12
Engineering and management (12.5 percent)*			1.65		1.65		1.65		1.65		2.64
TOTAL 1993 Watana Station Cost			14.85		14.85		14.85		14.85		23.76
Fairbanks											
Base cost - 230 kV	1.50					1	1.50	1	1.50	1	1.50
- 345 kV	2.00	1	2.00	1	2.00						
Circuit breakers - 138 kV	0.40	4.5	1.80	4.5	1.80	4.5	1.80	4.5	1.80	4.5	1.80
- 230 kV	0.70					8	5.60	8	5.60	8	5.60
- 345 kV	1.00	10	10.00	10	10.00						
Transformers - 230/138 kV, 150 MVA	0.80					3	2.40	3	2.40	3	2.40
- 345/138 kV, 150 MVA	0.90	3	2.70	3	2.70						
Shunt reactors - 345 kV, 75 MVAR	0.83	2	1.66	2	1.66						
Static VAR sources (MVAR)	0.03	100	3.00	100	3.00	200	6.00	200	6.00	200	6.00
Subtotal			21.16		21.16		17.30		17.30		17.30
Contingency (20 percent)			4.23		4.23		3.46		3.46		3.46
Subtotal			25.39		25.39		20.76		20.76		20.76
Engineering and management (12.5 percent)*			3.17		3.17		2.60		2.60		2.60
TOTAL 1993 Fairbanks Station Cost			28.57		28.57		23.36		23.36		23.36
TOTAL 1993 Substation Capital Cost			123.88		123.88		135.95		135.95		185.06

Table D.3: Substation Capital Costs - 4

Year 2000 Substation Costs	Unit Cost ($M)	Transmission Alternative 1 Quantity	1 $M	2 Quantity	2 $M	3 Quantity	3 $M	4 Quantity	4 $M	5 Quantity	5 $M
Anchorage											
Circuit breakers - 230 kV	0.70	3	2.10	3	2.10	3	2.10	3	2.10	3	2.10
- 345 kV	1.00	3	3.00	5	5.00	3	3.00	5	5.00		
- 500 kV	1.60									3	4.80
Transformers - 345/230 kV, 250 MVA	1.30	2	2.60	2	2.60	2	2.60	2	2.60		
- 500/230 kV, 250 MVA	1.60									2	3.20
Series compensation (MVAR)	0.014	430	6.02			430	6.02				
Subtotal			13.72		9.70		13.72		9.70		10.10
Contingency (20 percent)			2.74		1.94		2.74		1.94		2.02
Subtotal			16.46		11.64		16.46		11.64		12.12
Engineering and management (12.5 percent)*			2.06		1.46		2.06		1.46		1.52
TOTAL 2000 Anchorage Station Cost			18.52		13.10		18.52		13.10		13.64
Willow											
Circuit breakers - 138 kV	0.40	1.5	0.60	1.5	0.60	1.5	0.60	1.5	0.60	1.5	0.60
- 345 kV	1.00	2	2.00	5	5.00	2	2.00	5	5.00		
- 500 kV	1.60									2	3.20
Transformers - 345/138 kV, 75 MVA	0.50	1	0.50	1	0.50	1	0.50	1	0.50		
- 500/138 kV, 75 MVA	0.70									1	0.70
Series compensation (MVAR)	0.014	773	10.82			773	10.82				
Subtotal			13.92		6.10		13.92		6.10		4.50
Contingency (20 percent)			2.78		1.22		2.78		1.22		0.90
Subtotal			16.70		7.32		16.70		7.32		5.40
Engineering and management (12.5 percent)*			2.09		0.92		2.09		0.92		0.68
TOTAL 2000 Willow Station Cost			18.79		8.24		18.79		8.24		6.08

Table D.3: Substation Capital Costs - 5

Year 2000 Substation Costs	Unit Cost ($M)	Transmission Alternative 1 Quantity	1 $M	2 Quantity	2 $M	3 Quantity	3 $M	4 Quantity	4 $M	5 Quantity	5 $M
Devil Canyon											
Circuit breakers - 230 kV	0.70					1	0.70	1	0.70	1	0.70
- 345 kV	1.00	3	3.00	5	5.00	3	3.00	5	5.00		
- 500 kV	1.60									3	4.80
Transformers - 345/230 kV, 150 MVA	0.90					1	0.90	1	0.90		
- 500/230 kV, 150 MVA	1.20									1	1.20
Subtotal			3.00		5.00		4.60		6.60		6.70
Contingency (20 percent)			0.60		1.00		0.92		1.32		1.34
Subtotal			3.60		6.00		5.52		7.92		8.04
Engineering and management (12.5 percent)*			0.45		0.75		0.69		0.99		1.01
TOTAL 2000 Devil Canyon Station Costs			4.05		6.75		6.21		8.91		9.05
Fairbanks											
Circuit breakers - 138 kV	0.40	1.5	0.60	1.5	0.60	1.5	0.60	1.5	0.60	1.5	0.60
- 230 kV	0.70					1	0.70	1	0.70	1	0.70
- 345 kV	1.00	1	1.00	1	1.00						
Transformers - 230/138 kV, 150 MVA	0.80					1	0.80	1	0.80	1	0.80
- 345/138 kV, 150 MVA	0.90	1	0.90	1	0.90						
Series compensation (MVAR)	0.014					430	6.02	430	6.02	430	6.02
Subtotal			2.50		2.50		8.12		8.12		8.12
Contingency (20 percent)			0.50		0.50		1.62		1.62		1.62
Subtotal			3.00		3.00		9.74		9.74		9.74
Engineering and management (12.5 percent)*			0.38		0.38		1.22		1.22		1.22
TOTAL 2000 Fairbanks Station Costs			3.38		3.38		10.96		10.96		10.96
TOTAL 2000 Substation Capital Costs			44.74		31.47		54.48		41.21		39.73

* Engineering and management includes

- engineering	5.0 percent
- construction management	5.0 percent
- owner's cost	2.5 percent
Total	12.5 percent

**Cost of generator transformers for 345-kV transmission is included in powerhouse cost estimates. Alternative 5 requires adjustment for incremental cost of 500-kV transformers.

TABLE D-4: TRANSMISSION AND SUBSTATION ANNUAL CHARGES

		Transmission Alternative									
		1		2		3		4		5	
	Percent of Capital Cost*	Capital Cost ($M)	Capitalized Annual Charges ($M)	Capital Cost ($M)	Capitalized Annual Charges ($M)	Capital Cost ($M)	Capitalized Annual Charges ($M)	Capital Cost ($M)	Capitalized Annual Charges ($M)	Capital Cost ($M)	Capitalized Annual Charges ($M)
1993 Capitalized Annual Line Charges	83.62	217.13	181.56	192.25	160.76	183.17	153.17	162.74	136.08	216.39	180.95
2000 Capitalized Annual Line Charges	77.94	-	-	39.12	30.49	-	-	39.12	30.49	-	-
1993 Capitalized Annual Station Charges	109.35	123.88	135.46	123.88	135.46	135.95	148.66	135.95	148.66	185.06	202.36
2000 Capitalized Annual Station Charges	101.92	44.74	45.60	31.47	32.07	54.48	55.53	41.21	42.00	39.73	40.49

*Capitalized annual charge percentages are developed in the text on page D-3.

TABLE D.5: TRANSMISSION LINE LAND ACQUISITION COSTS

Transmission Line			Transmission Alternative									
			1		2		3		4		5	
Voltage	Number of Circuits	Unit Cost ($M/mi)	Length (miles)	$M	Length (miles)	$M	Length (miles)	$M	Length (miles)	$M	Length (miles)	$M
230 kV	2	0.070	-	-	-	-	189	13.23	189	13.23	189	13.23
345 kV	2	0.075	356	26.70	216	16.20	167	12.53	27	2.03	-	-
345 kV	3	0.096	-	-	140	13.44	-	-	140	13.44	-	-
500 kV	2	0.080	-	-	-	-	-	-	-	-	167	13.36
TOTAL 1993 Land Acquisition Costs				26.70		29.64		25.76		28.70		26.59

TABLE D.6: CAPITALIZED TRANSMISSION LINE LOSSES

Capitalized Line Losses	Unit Cost ($M/mi)	Transmission Alternative 1 Miles	1 $M	2 Miles	2 $M	3 Miles	3 $M	4 Miles	4 $M	5 Miles	5 $M
Watana to Devil Canyon (27 mi)											
2 x 345 kV, 2 x 1,351 kcmil	0.2517	27	6.80	-	-	27	6.80	-	-	-	-
2 x 345 kV, 2 x 954 kcmil	0.3565	-	-	27	9.62	-	-	27	9.62	-	-
2 x 500 kV, 3 x 795 kcmil	0.1358	-	-	-	-	-	-	-	-	27	3.67
Devil Canyon to Anchorage (140 mi)											
2 x 345 kV, 2 x 1,351 kcmil	0.4352	140	60.93	-	-	140	60.93	-	-	-	-
3 x 345 kV, 2 x 954 kcmil	0.4262*	-	-	140	59.67	-	-	140	59.67	-	-
2 x 500 kV, 3 x 795 kcmil	0.2344	-	-	-	-	-	-	-	-	140	32.82
Devil Canyon to Fairbanks (189 mi)											
1 x 230 kV, 1 x 1,272 kcmil	0.06497	-	-	-	-	293	19.04	378	24.56	378	24.56
1 x 230 kV, 1 x 1,351 kcmil	0.06117	-	-	-	-	85	5.20	-	-	-	-
1 x 345 kV, 2 x 795 kcmil	0.02310	293	6.77	293	6.77	-	-	-	-	-	-
1 x 345 kV, 2 x 954 kcmil	0.01925	-	-	85	1.64	-	-	-	-	-	-
1 x 345 kV, 2 x 1,351 kcmil	0.01359	85	1.16	-	-	-	-	-	-	-	-
TOTAL 1993 Capitalized Line Losses			75.66		77.70		91.97		93.85		61.05

*Includes losses on two circuits from 1993 - 1999 and three circuits from 2000 - 2042 inclusive.

APPENDIX E

HVDC TRANSMISSION

TABLE OF CONTENTS

LIST OF TABLES

LIST OF FIGURES

APPENDIX E

HVDC TRANSMISSION

E1 - GENERAL

Traditionally, HVDC has found economic application for long-distance overhead line (point-to-point) transmission or where significant lengths of submarine cable were involved. In either case, the savings resulting from the HVDC line or cable as compared to the cost of ac lines or cables need to be sufficient to offset the additional cost of dc terminal facilities.

Other characteristics of HVDC transmission that have been significant in its application are

- its asynchronous nature and hence the elimination of a transient or dynamic stability problem

- its "controllability" may be an advantage to limit steady-state circulating power flow in system interconnections, or to introduce damping to limit or control system dynamic oscillations

- its ability to limit short-circuit contributions.

In the case of Susitna transmission, HVDC is not an obvious contender. No technical difficulties are anticipated in an ac transmission scheme and the transmission distances (140 miles to Anchorage and 189 miles to Fairbanks) are well within the normal economic limits of ac transmission. Also, the transmission involves three terminals leading to some complication of the dc control and adding to the cost of some of the primary circuit elements as well. However, in the Anchorage area some submarine cable circuits may be involved in delivering Susitna power

to the load center. Hence, it is appropriate to carry out a screening analysis to determine whether or not the dc alternative merits further study.

E2 - ECONOMIC SCREENING

E2.1 - Basic Schemes

Since a number of variations are possible in the HVDC basic arrangement, and also in combinations of ac and HVDC transmission, each transmission link (from Susitna to Anchorage and Susitna to Fairbanks) will be examined separately. In this base comparison, separate point-to-point dc schemes are implied.

In order to take into account possible savings associated with HVDC cable circuits in the Anchorage area, the transmission costs to Anchorage include submarine cable circuits as needed to bring the power to the metropolitan load center.

All transmission from Susitna to Anchorage and Fairbanks is assumed to start at a Devil Canyon switching station and terminate at an appropriate voltage in each load center. Ac transmission circuits and switching facilities between Devil Canyon and Watana are assumed to be common to both ac and dc alternatives, and their costs are excluded from the analysis.

Dynamic var generating equipment is needed at the load centers for both ac and dc alternatives. The necessary var capability for ac transmission was determined in load flow studies of critical line outage conditions. In the case of the dc alternative some vars will be generated by the ac filters. The balance, as needed to meet the total var demand of the load and the inverters themselves, is estimated and charged to the dc alternative. All of the required var generation is assumed to

be located on transformer tertiary windings. Necessary switching is included in the unit var cost.

The alternative HVDC transmission systems are planned to be capable of handling full rated power under conditions of single contingency outages. In the dc terminals, this means that one valve group module could be out of service and the remaining valve groups should be able to handle the rated load. Similarly, on the transmission line, one pole may be out of service and the remaining pole(s) should be capable of handling the load without interruption.

For the transmission to Anchorage (rated 1,190 MW) a ±250-kV bipolar scheme is envisaged, with four valve groups per terminal. Under normal conditions one bipolar transmission line to Anchorage would be adequate. However, the loss of one line pole would result in a temporary power reduction, and full power could be resumed only after terminal switching, and an earth return current would flow throughout the total duration of the pole outage. For this reason, and to provide a system more comparable to the ac alternative in case of a tower failure, two bipolar transmission lines are provided for transmission to Anchorage.

In the case of ac transmission to Anchorage, an intermediate switching station and transformation to 138 kV is provided at Willow. This is an integral part of the ac alternative. For the dc alternative, an equivalent power supply to Willow is provided by adding two 230-kV ac circuits from Point Mackenzie to Willow. The cost of these circuits plus a 230-kV bus and transformation to 138 kV at Willow is included as part of the cost of dc transmission to Anchorage, so that both schemes would be functionally equivalent.

The transmission to Fairbanks is rated 350 MW and at this load level it is difficult to justify more than a single bipolar transmission line. Loss of one pole would result in an earth return current and, if a power interruption is to be avoided, the terminal equipment on each

pole must be capable of handling the full 350 MW. This results in 100 percent reserve capacity, but it is still more economic than the building of a second bipolar transmission line.

The ac and dc comparative systems are shown in single line diagrams in Figure E2.1 for transmission to Anchorage and in Figure E2.2 for transmission to Fairbanks.

E2.2 - Comparative Costs

Capital costs associated with the various ac and dc transmission alternatives are developed in a series of tables as follows.

Tables	Transmission Alternative
E2.1	ac to Anchorage
E2.2	dc to Anchorage
E2.3	ac to Fairbanks
E2.4	dc to Fairbanks

The costs developed in these tables are all for the ultimate installation as the effect of staging is expected to be similar for both ac and dc alternatives.

In all ac transmission alternatives, the unit costs for station equipment and transmission lines are those used in Section 3.7 of this planning memorandum. The costs used for ac cable circuits are based on quoted estimates for 230-kV cables. Where station buses are existing or would be common to both ac and dc alternatives, no base cost is charged.

All HVDC terminal equipment is estimated at $44/kW per terminal, based on manufacturers' recent estimates.

The necessary ac switchyard circuit entries are estimated additional to the base HVDC terminal costs. Var generation over and above that provided by the HVDC filter circuits is estimated, based on the var demand of the converters and the load, and the cost is allowed for in the receiving terminals. At the HVDC sending end, no additional charge is made to ensure that generating equipment can tolerate the var demand and harmonic currents of the converters. Some added costs would be incurred, but these are expected to have only a secondary effect on the cost comparison.

HVDC transmission line costs are estimated as follows for ±250-kV bipolar transmission lines.

Conductor Area per Pole (kcmil)	Estimated Cost per Mile ($)
2 x 1,780	250,000
2 x 1,272	200,000

In the case of the HVDC cable circuits, these are estimated at 20 times the cost of equivalent overhead line, or $5 million per mile. This is consistent with the estimate used for ac cable circuits and it is considered to be sufficiently close for this type of cost comparison.

Comparative costs for ac and dc transmission alternatives are summarized in Table E2.5. Here the line and station capital costs developed in Tables E2.1 to E2.4 are combined with cost of right-of-way and capitalized annual operating costs to give capitalized total costs that may then be compared. Included in the annual operating costs are a number of miscellaneous charges which contribute to totals for transmission and stations as follows.

	Annual Operating Charges (Percent of Capital Cost)	
	Transmission	Substation
Operating and maintenance	1.00	2.00
Insurance	0.10	0.10
Interim replacement	0.15	0.15
Contribution in lieu of taxes	2.00	2.00
Total annual operating	3.25	4.25

The annual operating charges shown in Table E2.5 have been capitalized at a 3 percent interest rate over the 50-yr life of the transmission system. The same annual charge rates have been used for both ac and dc transmission on the assumption that differences in operating costs due to differences in complexity will be adequately reflected in the differences in capital investment for ac and dc plant.

Capitalized costs of losses for ac transmission lines were developed as part of the exercise to determine economic conductor sizes. Loss energy was valued at 3.5 cent/kW·h, based on the results of the generation planning exercise for the period under study. The capitalized total cost of loss for ac transmission was derived by adding transformer losses at 0.5 percent per terminal to the line losses. In the case of HVDC transmission, total terminal losses were calculated at 1.25 percent and added to line losses to derive the capitalized cost of losses shown for the dc alternatives.

Land acquisition costs are estimated for the line right-of-way only. Land requirements at terminal locations are assumed to be similar for both ac and dc alternatives.

E2.3 - Results

Comparative costs of ac and dc transmission alternatives as shown in Table E2.5 confirm that ac is an appropriate choice for transmission from Susitna to load centers at Anchorage and Fairbanks. The conclusion is based on separate assessments of transmission costs to each of the two load centers, and this implies the use of two 2-terminal dc transmission systems. Some dc economies might be achieved with an alternate 3-terminal dc arrangement, but any savings are unlikely to overcome the indicated 15 percent margin favoring ac transmission.

The economic conclusions are consistent with the results of other studies for the load levels and transmission distances involved, and they are considered adequate to support the selection of ac transmission over HVDC for the Susitna project.

TABLE E2.1: AC TRANSMISSION TO ANCHORAGE DEVELOPMENT OF CAPITAL COSTS

Location	Details		Cost Components: Quantity	Unit Cost ($M)	Station Cost: Component ($M)	Station Cost: Total ($M)	Line Costs ($M)	Total Costs ($M)
Devil Canyon	breakers	345 kV	5	1.00	5.00	5.00	-	-
Overhead Transmission	3 cct, 345 kV, 2x954 kcmil conductor - 140 mi route		420	0.279	-	-	117.18	-
Willow Terminal	base	345 kV	1	2.00	2.00	-	-	-
	breakers	345 kV	14	1.00	14.00	-	-	-
	breakers	138 kV	5	0.40	2.00	-	-	-
	transformers	75 MVA	3	0.50	1.50	19.50	-	-
West Terminal	base	345 kV	1	2.00	2.00	-	-	-
	breakers	345 kV	14	1.00	14.00	-	-	-
	breakers	230 kV	15	0.70	10.50	-	-	-
	transformers	250 MVA	6	1.30	7.80	-	-	-
	VAR generation	400 MVAR	-	0.03	12.00	46.30	-	-
Cables	4 cct, 230 kV, 3.7 mi		4	20.25	-	-	81.00	-
Anchorage Terminal	breakers	230 kV	6	0.70	4.20	4.20	-	-
Terminal Subtotal						75.00		
Indirect Costs (at 32.5 percent)						24.38		
Total Costs						99.38	198.18	297.56

TABLE E2.2: HVDC TRANSMISSION TO ANCHORAGE DEVELOPMENT OF CAPITAL COSTS

Location	Details	Cost Components: Quantity	Unit Cost ($M)	Station Costs: Component ($M)	Station Costs: Total ($M)	Line Costs ($M)	Total Costs ($M)
Devil Canyon	breakers 230 kV	6	0.70	4.20	-	-	-
	HVDC 1,586.7 MW	-	0.044	69.81	74.01	-	-
HVDC Transmission							
Overhead	2 bipolar circuits ±250 kV 2x1,780 kcmil conductor 140 mi route	280	0.250			70.00	-
Cable	2 bipolar circuits 3.7 mi route	2	18.50			37.00	-
Anchorage	HVDC 1,586.7 MW	-	0.044	69.81	-	-	-
	breakers 230 kV	6	0.7	4.20	-	-	-
	VAR generation 670 MVAR	-	0.03	21.10	94.11	-	-
AC Supply to Willow							
Point Mckenzie	breakers 230 kV	3	0.70	2.10	-	-	-
Transmission	230 kV, 2 circuits 1,272 kcmil conductor 50 mi route	100	0.184	-	-	18.40	-
Willow	base 230 kV	1	1.50	1.50	-	-	-
	breakers 230 kV	8	0.70	5.60	-	-	-
	breakers 138 kV	5	0.40	2.00	-	-	-
	transformers 75 MVA	3	0.50	1.50	12.70	-	-
Terminal Subtotal					180.82		
Indirect Costs (at 32.5 percent)					58.77		
Total Costs					239.50	125.40	364.99

TABLE E2.3: AC TRANSMISSION TO FAIRBANKS DEVELOPMENT OF CAPITAL COSTS

Location	Details		Cost Components: Quantity	Unit Cost ($M)	Station Costs: Component ($M)	Station Costs: Total ($M)	Line Costs ($M)	Total Costs ($M)
Devil Canyon	breakers	345 kV	3	1.00	3.00	3.00	-	-
Overhead Transmission	2 cct, 345 kV, 2x795 kcmil conductor, 189 mi route		378	0.256	-	-	96.77	-
Fairbanks Terminal	base	345 kV	1	2.00	2.00	-	-	-
	breakers	345 kV	11	1.00	11.00	-	-	-
	breakers	138 kV	6	0.40	2.40	-	-	-
	transformers	250 MVA	4	0.90	3.60	-	-	-
	reactors	75 MVAR	2	0.83	1.66	-	-	-
	VAR generation	100 MVAR	-	0.03	3.00	23.66	-	-
Terminal Subtotal						26.66		
Indirect Costs (at 32.5 percent)						8.66		
Total Costs						35.32	96.77	132.09

TABLE E2.4: HVDC TRANSMISSION TO FAIRBANKS DEVELOPMENT OF CAPITAL COSTS

Location	Details		Cost Components: Quantity	Unit Cost ($M)	Station Costs: Component ($M)	Station Costs: Total ($M)	Line Costs ($M)	Total Costs ($M)
Devil Canyon	breakers	230 kV	6	0.700	4.20	-	-	-
	HVDC	700 MW	-	0.044	30.80	35.00	-	-
HVDC Transmission	1 bipolar circuit ±250 kV, 2x1,272 kcmil conductor		189	0.200	-	-	37.80	-
Fairbanks Terminal	HVDC	700 MW	-	0.044	30.80	-	-	-
	breakers	138 kV	6	0.400	2.40	-	-	-
	VAR generation	245 MVAR	-	0.030	7.35	40.55	-	-
Terminal Subtotal						75.55		
Indirect Costs (at 32.5 percent)						24.55		
Total Costs						100.10	37.80	137.90

TABLE E2.5: SUMMARY OF COMPARATIVE COSTS AC VERSUS DC TRANSMISSION

Cost Components	Comparative Costs - $ Million			
	Transmission to Anchorage		Transmission to Fairbanks	
	AC	DC	AC	DC
Line Costs				
line capital[1]	198.18	125.40	96.77	37.80
line capitalized O&M[1]	165.72	104.86	80.92	31.61
land acquisition (R.O.W.)[3]	13.44	8.40	14.18	7.56
Station Costs				
station capital[1]	99.38	239.59	35.32	100.10
station capitalized O&M[2]	108.67	262.00	38.62	109.46
Capitalized Cost of Losses[4]	83.87	74.94	13.72	16.63
Total Costs	669.26	815.19	279.53	303.16

[1] Line and station capital costs are developed in Tables E2.1 to E2.4.

[2] Capitalized O&M charges include O&M, insurance, interim replacement and contributions in lieu of taxes. These annual charges total 3.25 percent of transmission capital and 4.25 percent of station capital, and they are capitalized over 50 years at 3 percent.

[3] Land acquisition (R.O.W.) costs are estimated at $96,000/mile and $75,000/mile for 345 kV, 3 cct and 2 cct transmission respectively, and $60,000/mile and $40,000/mile for ±250 kV dc 2-circuit and single circuit, respectively.

[4] Losses are valued at 3.5¢/kW·h, and they are capitalized over the 50-year line life at 3 percent.

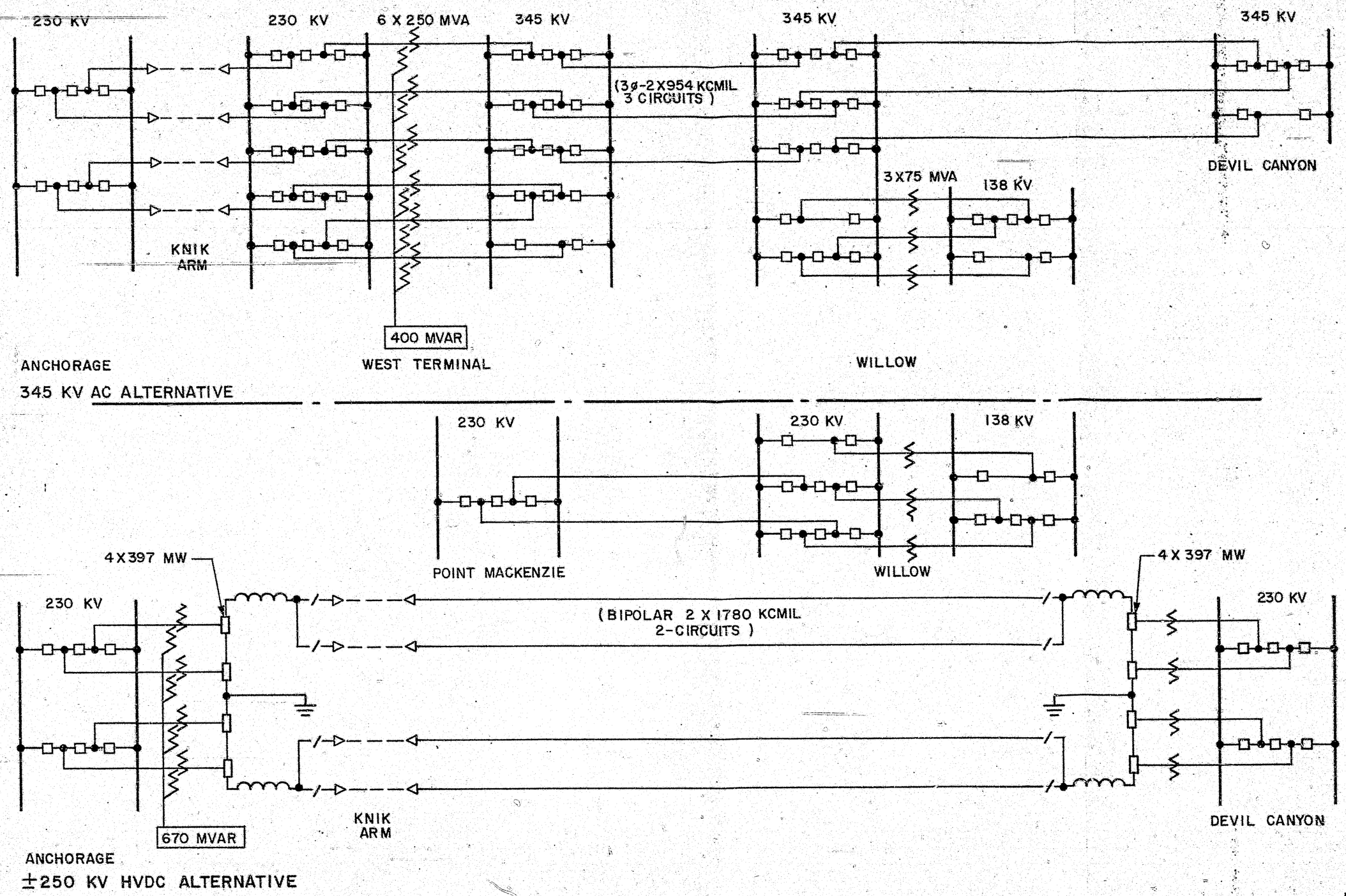

COMPARISON OF HVDC VERSUS AC TRANSMISSION TO ANCHORAGE

FIGURE E-2.1

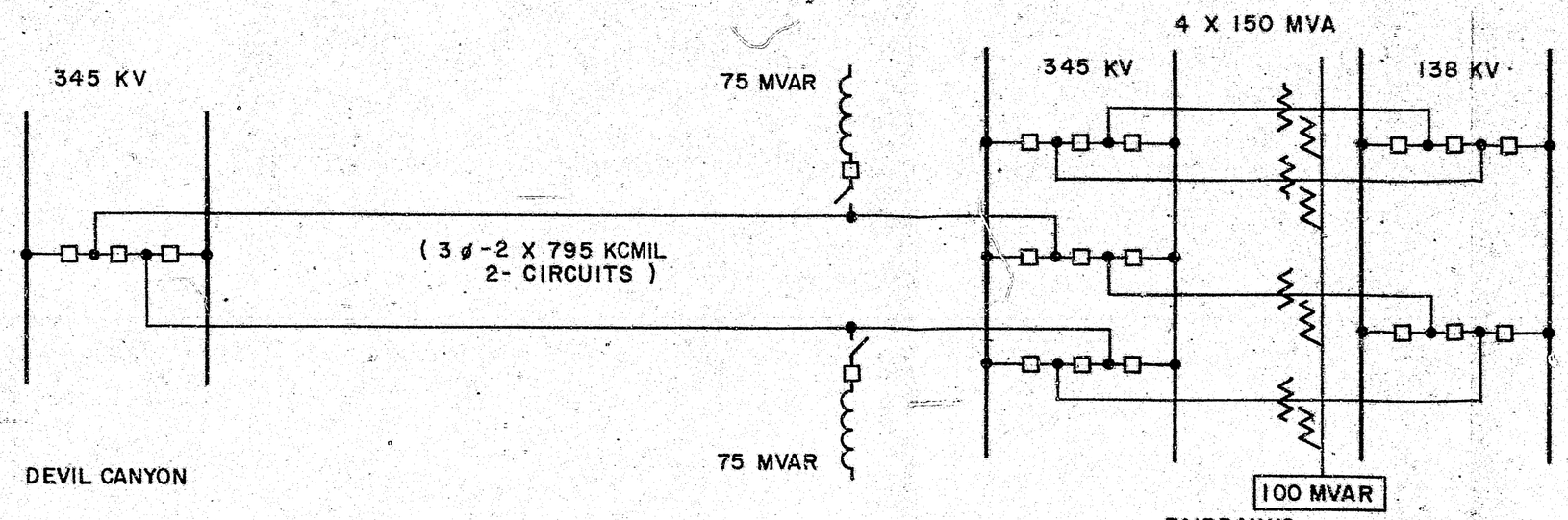

345 KV AC ALTERNATIVE

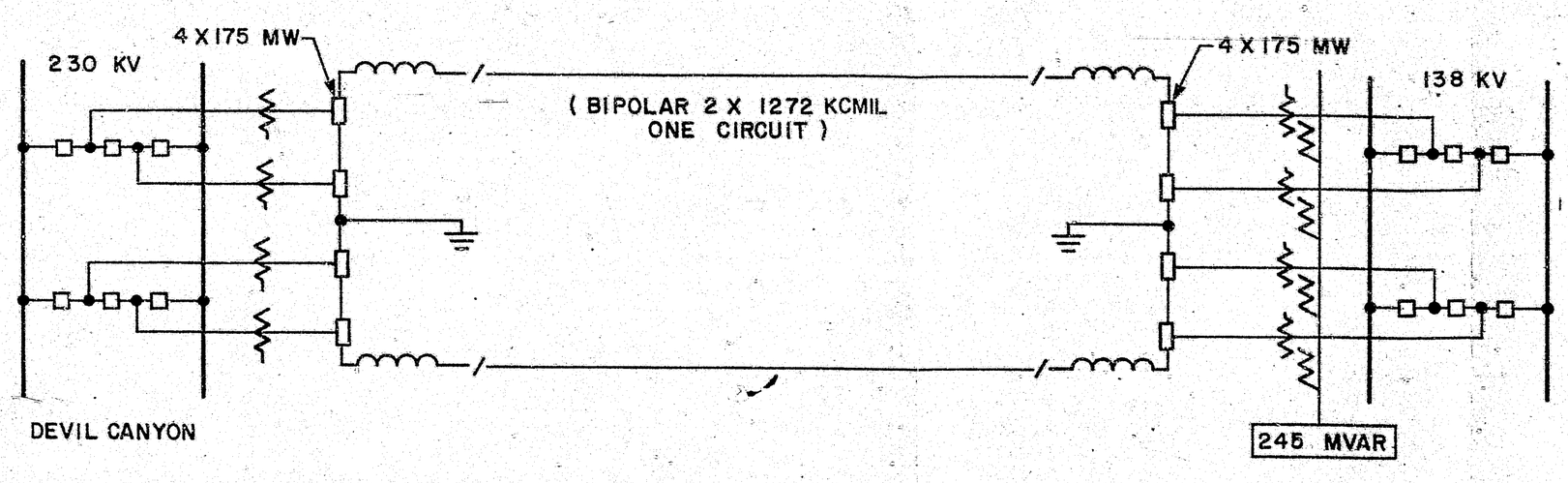

± 250 KV HVDC ALTERNATIVE

COMPARISON OF HVDC VERSUS AC TRANSMISSION TO FAIRBANKS

FIGURE E-2.2